Portable compact disc player

Service
Service
Service

AZ7902	AZ9102	AZ9141	AZ9211
AZ9001	AZ9103	AZ9142	AZ9213
AZ9002	AZ9104	AZ9143	AZ9214
AZ9003	AZ9106	AZ9201	AZ9218
AZ9011	AZ9111	AZ9202	all versions
AZ9101	AZ9113	AZ9203	

PRODUCT FAMILY DORIS2 – PB2

Service Manual

ReWritable CD COMPATIBLE

COMPACT disc DIGITAL AUDIO

TABLE OF CONTENTS

Technical specification 1-1
Connections and controls 1-2
Features 1-3
Accessories 1-3

Safety & Warnings 1-4

Service hints
- Repair positions 2-1
- Dismantling CD-door 2-1
- CD-drive cleaning & lubrication 2-2
- CD-drive lens cleaning 2-2
- Handling chip components 2-3
- Service tools 2-3

Pin description of ICs .....3-1...3-4
Start-up procedure 3-5

Service Test Program .....3-6...3-7

Blockdiagram 3-8

Circuit diagrams
- Part1 (signal processing) 4-1
- Part2 (control) 4-2
- Part3 (supply) 4-3

Printed circuit board
- Componentside view 4-4
- Copperside view 4-5

Exploded view .....5-1...5-3
Mechanical partslist 5-1

Electrical partslist .....6-1...6-4

CLASS 1
LASER PRODUCT

© Copyright 2000 Philips Consumer Electronics B.V. Eindhoven, The Netherlands
All rights reserved. No part of this publication may be reproduced, stored in a retrieval system or transmitted, in any form or by any means, electronic, mechanical, photocopying, or otherwise without the prior permission of Philips.

Published by PW 0005 Service Audio Printed in The Netherlands Subject to modification

GB 3103 785 25010

CS 46 658

PHILIPS

TECHNICAL SPECIFICATION

General

Dimensions (WxHxD) : 128x28x139mm
Weight without batteries : 220g

Power supply modes

DC-in socket : 2.5-6.0V
Primary batteries (2xLR6) : 1.6-3.6V
Rechargable batteries (AY3362) : 1.6-3.6V

Battery lifetime

BATTERY TYPE	ESP OFF	ESP ON
Primary batteries 2 x LR6	≥14h (20h typ.)	≥14h (17h typ.)
Rechargable batteries AY3362 (1200mAh)	≥7h (9.5h typ.)	≥7h (9.5h typ.)

Battery level detection

DETECTION LEVEL	Primary batteries	Rechargable batteries
Battery empty	1.8V +100/-50mV	1.8V +100/-50mV
Battery weak 1	battery empty level + 0.9V ±100mV	battery empty level + 0.7V ±100mV
Battery weak 2	battery empty level + 0.6V ±100mV	battery empty level + 0.5V ±100mV
Battery weak 3	battery empty level + 0.3V ±100mV	battery empty level + 0.3V ±100mV

Charge section (not on all versions)

Charge current : 250mA ±10%
Charge time for 80% AY3362 : 4.0h nom.
Max. charge time (µP controlled) : 7h
Temperature protection : 50°C ±5°C

Current consumption

OPERATION MODE	DC-IN SUPPLY (4.5V)		BATT. SUPPLY (2.25V)	
	ESP OFF	ESP ON	ESP OFF	ESP ON
Play-mode	100mA typ.	100mA typ.	120mA typ.	120mA typ.
Jump-mode	220mA typ.	220mA typ.	300mA typ.	400mA typ.
Stand-by (excl. recharge)	30mA typ.		100µA typ.	

Shock resistance

+X/-X direction : ≥2.5g
+Y/-Y direction : ≥2.5g
+Z/-Z direction : ≥2.0g

Headphone out (measured with 16Ω load, DBB/ESP off)

Output power (THD=10%)
/17 version only : 2x6mW (+1/-3dB)
all other versions : 2x3mW (+1/-3dB)
Frequency response (1mW) : 100Hz-20kHz within 6dB
S/N ratio (unwght) : ≥78dB (81dB typ.)
S/N ratio (A-wght) : ≥81dB (84dB typ.)
THD+N (1kHz, 1mW) : ≤1% (0.2% typ.)
Channel crosstalk (1kHz, no load) : ≤-24dB (-44dB typ.)
Channel unbalance (-40dB) : ≤5dB
Volume attenuation (1kHz) : ≥60dB

Dynamic Bass Boost DBB

DBB STAGE	Frequency response		
	63kHz	1kHz	10kHz
DBB 1	+6dB ±2dB	0dB ±2dB	0dB ±2dB
DBB 2	+9dB ±2dB	0dB ±2dB	+5dB ±2dB

Laser

Output power : <5mW (3mW typ.)
Wavelength : 780nm

Measurement setup

Use Audio Signal disc SBC429 4822 397 30184

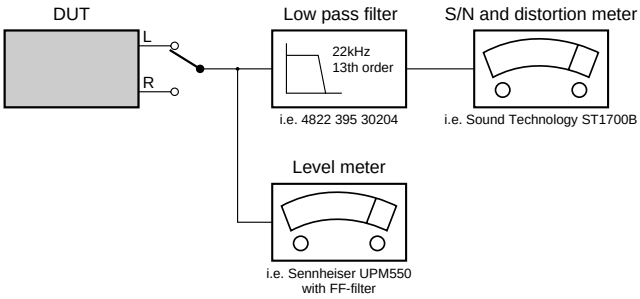

CONNECTIONS AND CONTROLS

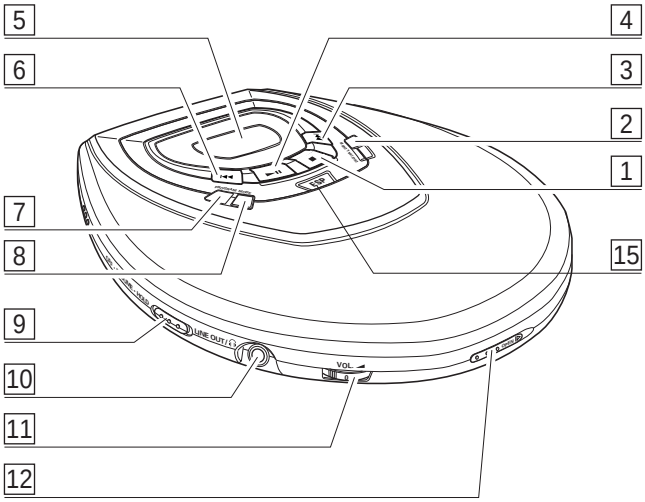

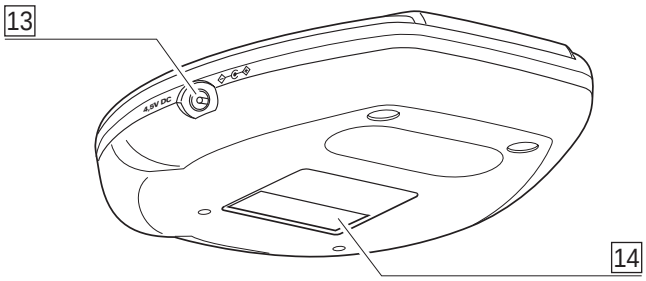

1 ■ .....stops CD play, clears a program or switches the player off

2 DBB.....DIGITAL **D**YNAMIC **B**ASS **B**OOST switches the bass enhancement on and off

3 ▶▶| .....skips and searches CD tracks forwards

4 ▶II .....switches the player on, starts or pauses CD play

5 .....display

6 |◀◀ .....skips and searches CD tracks backwards

7 PROGRAM .....programs tracks and reviews the program

8 MODE .....selects the different playing possibilities: **SHUFFLE, SHUFFLE REPEAT ALL, REPEAT, REPEAT ALL** and SCAN

9 RESUME.....stores the last position of a CD track played
HOLD.....locks all buttons
OFF.....switches RESUME and HOLD off

10 LINE OUT/🎧....3.5mm headphone socket, socket to connect the player to another analogue audio input of an additional appliance

11 VOL ◢.....adjusts the volume

12 OPEN ▶ .....opens the CD lid

13 4.5V DC .....socket for external power supply

14 .....typeplate

15 ESP.....**E**lectronic **S**kip **P**rotection ensures continuous CD playback regardless of vibrations and shocks

TROUBLESHOOTING (excerpt from the Instruction For Use)

Problem	Possible cause	Solution
No power, playback does not start	**Batteries**	
	Batteries inserted incorrectly	Insert the batteries correctly
	Batteries are empty	Change the batteries
	Contact pins are dirty	Clean them with a cloth
	Mains adapter	
	Loose connection	Connect the adapter securely
	In-car use	
	Cigarette lighter is not powered when ignition is off	Switch on ignition or insert batteries
nF d ISC **indication**	CD-RW (CD-R) is not recorded properly	Use FINALIZE on the CD Recorder to complete the recording
no d ISC **indication**	The CD is badly scratched or dirty	Replace or clean the CD
	CD is not or incorrectly inserted	Insert a CD, label upwards
	The laser lens is steamed up	Wait until the lens has cleared
HoLd **indication and/or no reaction to controls**	**HOLD is activated**	**Deactivate HOLD**
	Electrostatic discharge	Disconnect the set from power supply or take out the batteries for a few seconds

Problem	Possible cause	Solution
CD skips tracks	The CD is damaged or dirty	Replace or clean the CD
	RESUME, SHUFFLE or **PROGRAM** is active	Switch **RESUME, SHUFFLE** or **PROGRAM** off
No sound or bad sound quality	PAUSE is activated	Press ▶II
	Loose, wrong or dirty connections	Check and clean connections
	Volume is not adjusted	Adjust the volume
	Malfunctions due to vicinity of active mobile phones	Keep the player away from active mobile phones
	Strong magnetic fields near the player	Change the player's position or connections
	In-car use	
	Cassette adapter is inserted incorrectly	Insert the cassette adapter correctly
	Temperature inside the car is too high/low	Let the player adjust to the temperature
	Cigarette lighter socket is dirty	Clean the cigarette lighter socket
	Wrong playback direction of the car cassette player's autoreverse feature	Change the autoreverse direction

FEATURES

FEATURES OF CD-PORTABLE PRODUCT FAMILY “DORIS2 – PB2”	AZ7902	AZ9001	AZ9002	AZ9003	AZ9011	AZ9101	AZ9102	AZ9103	AZ9104	AZ9106	AZ9111	AZ9113	AZ9141	AZ9142	AZ9143	AZ9201	AZ9202	AZ9203	AZ9211	AZ9213	AZ9214	AZ9218
CD-RW COMPATIBILITY	●	●	●	●	●	●	●	●	●	●	●	●	●	●	●	●	●	●	●	●	●	●
ELECTRONIC SKIP PROTECTION	–	12s	12s	12s	12s	40s	40s	40s	40s	40s	40s	45s	40s	40s	40s	45s	45s	45s	45s	45s	45s	45s
ESP DRAM SIZE [Mbit]	–	4	4	4	4	8	8	8	8	8	8	8	8	8	8	8	8	8	8	8	8	8
HOLD / RESUME FUNCTION	●/●	●/●	●/●	●/●	●/●	●/●	●/●	●/●	●/●	●/●	●/●	●/●	●/●	●/●	●/●	●/●	●/●	●/●	●/●	●/●	●/●	●/●
DBB STAGES	2	2	2	2	2	2	2	2	2	2	2	2	2	2	2	2	2	2	2	2	2	2
ACOUSTIC FEEDBACK	●	●	●	●	●	●	●	●	●	●	●	●	●	●	●	●	●	●	●	●	●	●
PROGRAM MEMORY	99	99	99	99	99	99	99	99	99	99	99	99	99	99	99	99	99	99	99	99	99	99
RECHARGE NiCd / NiMH	●/●	–/–	●/●	–/–	–/–	–/–	–/–	–/–	–/–	–/–	–/–	–/–	–/–	–/–	–/–	–/–	●/●	–/–	–/–	–/–	–/–	–/–
CORD REMOTE CONTROL	–	–	–	–	–	–	–	–	–	–	–	–	–	–	–	–	–	–	–	–	●	–
LCD BACKLIGHT	–	–	–	–	–	–	–	–	–	–	–	–	–	–	–	–	–	–	–	–	–	–
LINE / OPT. DIGITAL OUTPUT	–/–	–/–	–/–	–/–	–/–	–/–	–/–	–/–	–/–	–/–	–/–	–/–	–/–	–/–	–/–	–/–	–/–	–/–	–/–	–/–	–/–	–/–

ACCESSORIES

ACCESSORIES FOR CD-PORTABLE PRODUCT FAMILY “DORIS2 – PB2”		AZ7902	AZ9001					AZ9002		AZ9003					AZ9011	AZ9101	AZ9102	AZ9103	AZ9104		AZ9106	AZ9111	AZ9113	AZ9141	AZ9142	AZ9143	AZ9201	AZ9202				AZ9203	AZ9211	AZ9213	AZ9214		AZ9218
		/00	/00	/00z	/05	/11	/17	/00	/05	/01	/09	/10	/18	/19	/00	/17	/17	/17	/16	/17	/17	/17	/17	/17	/17	/17	/00	/00	/05	/11	/13	/10	/00	/17	/00	/17	/17
AY3170/00 AC/DC Adaptor	4822 219 10617	X	X	X				X							X												X	X					X		X		
AY3170/02 AC/DC Adaptor	4822 219 10676									X																											
AY3170/05 AC/DC Adaptor	4822 219 10672				X				X																				X								
AY3170/09 AC/DC Adaptor	4822 219 10679										X		X																								
AY3170/10 AC/DC Adaptor	4822 219 10681											X																				X					
AY3170/12 AC/DC Adaptor	4822 219 10671					X													X											X							
AY3170/13A AC/DC Adaptor	3140 118 31590																														X						
AY3170/17 AC/DC Adaptor	4822 219 10616						X									X	X	X		X	X	X	X	X	X	X								X		X	X
AY3266/00 Pouch (Neoprene)	12NC follows																																		X	X	
AY3362/00 Rechargable Batt. NiMH	3103 308 84120	X						X	X																			X	X	X	X				X		
AY3501/00 Car Adaptor Cassette	4822 397 10059	O	O	O	O	O	O	O	O	X	X	X	X	X	O	O	O	X	X	X	O	O	X	X	X	X	O	O	O	O	O	X	O	X	O	O	X
AY3545/00 Car DC/DC Converter	4822 219 10033	O	O	O	O	O	O	O	O	X	X	X	X	X	O	O	O	X	X	X	O	O	X	X	X	X	O	O	O	O	O	X	O	X	O	O	X
AY3677/00 Earphone (L-plug)	4822 242 11004	X	X	X	X	X		X	X	X	X	X	X	X	X				X								X	X	X	X	X	X	X				X
AY3677/00S Earphone (straight plug)	4822 242 11021																																		X		
AY3682/00 Headphone (L-plug)	4822 242 11003						X									X	X	X		X	X	X	X	X	X	X								X		X	
AY3767/00 Cord Remote Control	12NC follows																																		X		
AY3464 HiFi Cord (3.5mm L-plug→cinch)	4822 320 11881	O	O	O	O	O	O	O	O	O	O	O	O	O	O	O	O	O	O	O	O	O	O	O	O	O	O	O	O	O	O	O	O	O	O	O	O

X...supplied with the set, O...optional available

SAFETY & WARNINGS

ESD

(GB) WARNING
All ICs and many other semiconductors are susceptible to electrostatic discharges (ESD). Careless handling during repair can reduce life drastically.
When repairing, make sure that you are connected with the same potential as the mass of the set via a wristband with resistance. Keep components and tools at this potential.

(NL) WAARSCHUWING
Alle IC´s en vele andere halfgeleiders zijn gevoelig voor electrostatische ontladingen (ESD).
Onzorgvuldig behandelen tijdens reparatie kan de levensduur drastisch doen vermindern. Zorg ervoor dat u tijdens reparatie via een polsband met weerstand verbonden bent met hetzelfde potentiaal als de massa van het apparaat.
Houd componenten en hulpmiddelen ook op ditzelfde potentiaal.

(F) ATTENTION
Tous les IC et beaucoup d´autres semi-conducteurs sont sensibles aux décharges statiques (ESD). Leur longévite pourrait être considérablement écourtée par le fait qu´aucune précaution nést prise à leur manipulation.
Lors de réparations, s´assurer de bien être relié au même potentiel que la masse de l´appareil et enfileer le bracelet serti d´une résistance de sécurité.
Veiller à ce que les composants ainsi que les outils que l´on utilise soient également à ce potentiel.

(D) WARNUNG
Alle ICs und viele andere Halbleiter sind empfindlich gegenüber elektrostatischen Entladungen (ESD).
Unsorgfältige Behandlung im Reparaturfall kann die Lebensdauer drastisch reduzieren.
Sorgen Sie dafür, daß Sie im Reparaturfall über ein Puls-armband mit Widerstand mit dem Massepotential des Gerätes verbunden sind.
Halten Sie Bauteile und Hilfsmittel ebenfalls auf diesem Potential.

(I) AVVERTIMENTO
Tutti IC e parecchi semi-conduttori sono sensibili alle scariche statiche (ESD).
La loro longevità potrebbe essere fortemente ridatta in caso di non osservazione della più grande cauzione alla loro manipolazione. Durante le riparationi occorre quindi essere collegato allo stesso potenziale che quello della massa delápparecchio tramite un braccialetto a resistenza.
Assicurarsi che i componenti e anche gli utensili con quali si lavora siano anche a questo potenziale.

(GB) AVAILABLE ESD PROTECTION EQUIPMENT :

anti-static table mat	large	1200x650x1.25mm	4822 466 10953
	small	600x650x1.25mm	4822 466 10958
anti-static wristband			4822 395 10223
connection box (3 press stud connections, 1MΩ)			4822 320 11307
extendible cable (2m, 2MΩ, to connect wristband to connection box)			4822 320 11305
connecting cable (3m, 2MΩ, to connect table mat to connection box)			4822 320 11306
earth cable (1MΩ, to connect any product to mat or to connection box)			4822 320 11308
KIT ESD3 (combining all 6 prior products - small table mat)			4822 310 10671
wristband tester			4822 344 13999

SAFETY

(GB)
Safety regulations require that the set be restored to its original condition and that parts which are identical with those specified be used.
Safety components are marked by the symbol ⚠

(NL)
Veiligheidsbepalingen vereisen, dat het apparaat in zijn oorspronkeliijke toestand wordt teruggebracht en dat onderdelen, identiek aan de gespecificeerde, worden toegepast.
De Veiligheidsonderdelen zijn aangeduid met het symbool ⚠

(F)
Les normes de sécurité exigent que l`appareil soit remis à l`état d`origine et que soient utilisées les pièces de rechange identiques à celles spécifiées.
Les composants de sécurité sont marqués ⚠

(I)
Le norme di sicurezza estigono che l´apparecchio venga rimesso nelle condizioni originali e che siano utilizzati i pezzi di ricambiago identici a quelli specificati.
Componenty di sicurezza sono marcati con ⚠

(D)
Bei jeder Reparatur sind die geltenden Sicherheitsvor-schriften zu beachten. Der Originalzustand des Gerätes darf nicht verändert werden. Für Reparaturen sind Original-ersatzteile zu verwenden.
Sicherheitsbauteile sind durch das Symbol ⚠ markiert.

(GB) **DANGER**: Invisible laser radiation when open.
AVOID DIRECT EXPOSURE TO BEAM.

CLASS 1
LASER PRODUCT

(S) Varning !
Osynlig laserstrålning när apparaten är öppnad och spärren är urkopplad. Betrakta ej strålen.

(DK) Advarsel !
Usynlig laserstråling ved åbning når sikkerhedsafbrydere er ude af funktion. Undgå udsaettelse for stråling.

(FIN) Varoitus !
Avatussa laitteessa ja suojalukituksen ohitettaessa olet alttiina näkymättömälle laserisäteilylle. Älä katso säteeseen !

(GB)
After servicing and before returning the set to customer perform a leakage current measurement test from all exposed metal parts to earth ground, to assure no shock hazard exists.
The leakage current must not exceed 0.5mA.

(F)
"Pour votre sécurite, ces documents doivent être utilisés par des spécialistes agréés, seuls habilités à réparer votre appareil en panne".

SERVICE HINTS

REPAIR POSITION COPPERSIDE

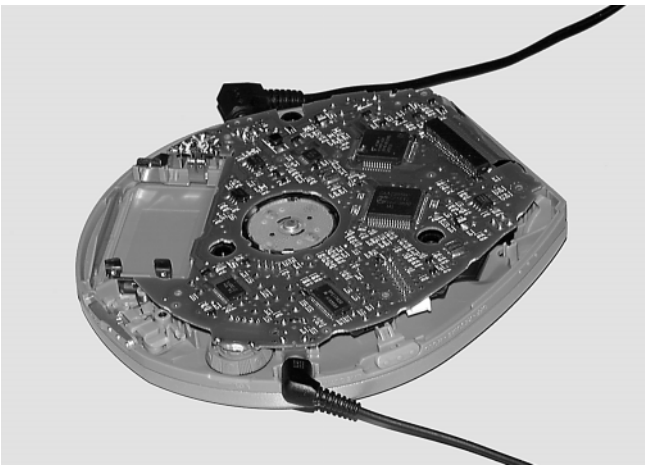

To get access to the copperside of the printed board assembly proceed as follows:

1. Remove the bottom screws (6x)
2. Lift the bottom-cabinet
3. Supply the unit via external DC-socket
4. Take care that the door switch is closed during measurements

REPAIR POSITION COMPONENTSIDE

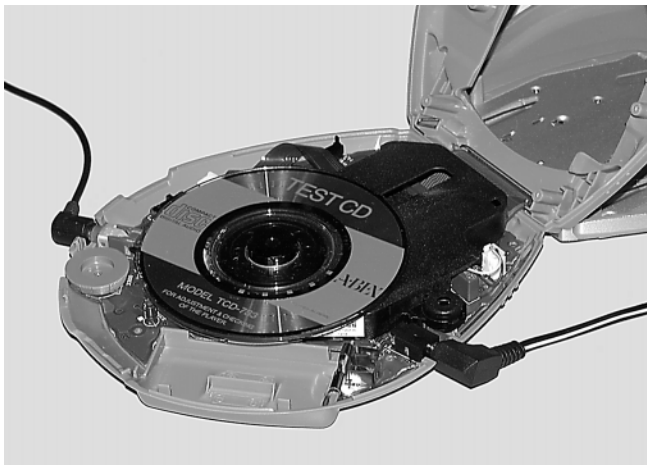

To get access to the componentside of the printed board assembly proceed as follows:

1. Remove the bottom screws (6x)
2. Open the CD-door
3. Lift the top-cabinet and put it backwards on the table
4. Supply the unit via the external DC-socket
5. Take care that the door switch is closed during measurements

DISMANTLING THE CD-DOOR

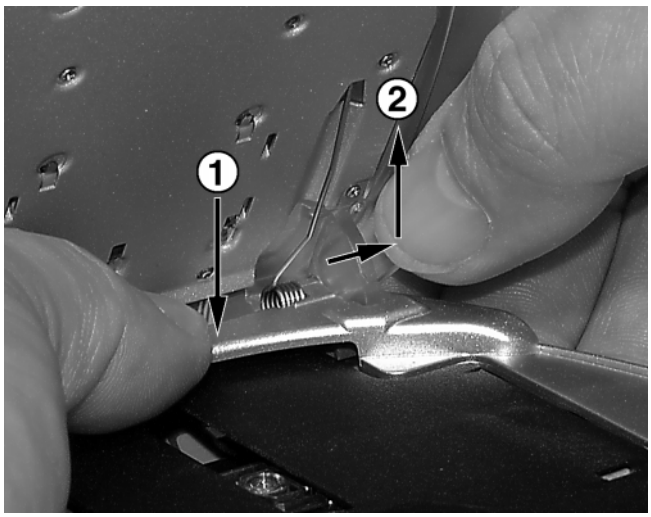

To dismantle the CD-door proceed as follows:

1. Disconnect the membrane keyboard (flex-foil connector on copperside of printed board)
2. Smoothly bend the bridge of the cabinet downwards as shown in ①. Take care not to touch the lens
3. Smoothly pull out the right hinge of the CD-door as shown in ②.
4. Lift the CD-door

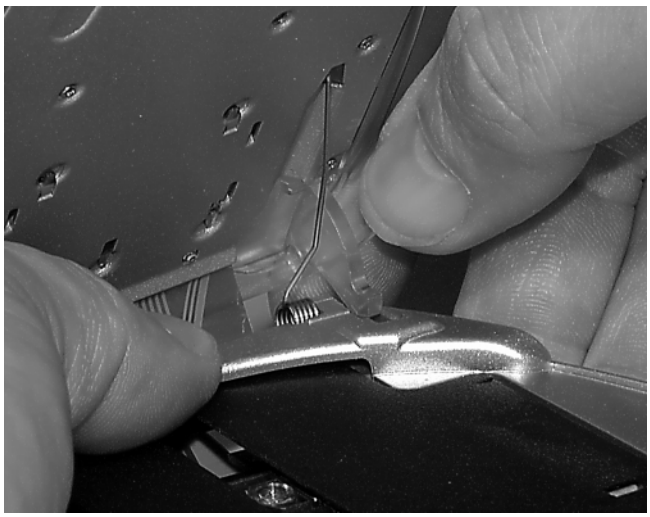

Remark: Do not use screwdrivers or tools like that.
Sharp edges could damage hinge or cabinet part.

VAM2103/08 – DRIVE CLEANING & LUBRICATION

Lubrication of the CD-drive is only necessary in case of symptom “skipping tracks”.
The reason can be dirt which sticks to the grease or the grease is getting aged.

Use an acid-free synthetic grease – i.e. “Tribol 9890-2” or equivalent.

Before greasing the mechanism first remove the old grease from the mechanism. Use a cotton swab dipped in alcohol to clean the mechanism.

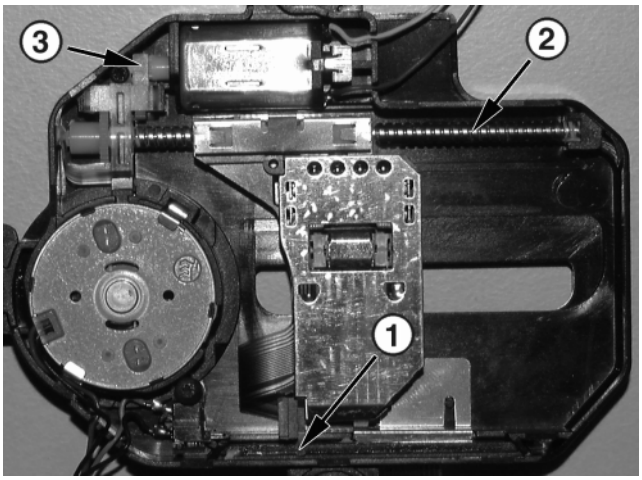

Cleaning the mechanism

1. Clean the lower and upper sledge guidance plane (optical pick-up).
2. Clean the spindle shaft.
3. Clean the area between the worm gear, idler wheel and clamping spring.

Lubricating the mechanism

1. Put one dot of grease onto the upper sledge guidance plane on each side of the sledge. Move the sledge to the inner and outer position to spread the grease.
   Put one dot of grease onto the lower sledge guidance plane on each side of the sledge. Move the sledge to the inner and outer position to spread the grease.
2. Put one dot of grease onto the spindle shaft on both sides of the sledge. Move the sledge to the inner and outer position to spread the grease.
3. Put one dot of grease between the worm gear and the clamping spring.

VAM2103/08 – LENS CLEANING

Before touching the lens it is advised to clean the surface of the lens by blowing clean air over it in order to avoid that little particles make scratches on the lens.

Because the material of the lens is synthetic and coated with a special anti-reflectivity layer, cleaning must be done with a non-aggressive cleaning fluid. It is advised to use “KODAK LENS CLEANER CAT 176 71 36”, available in normal photo shops.

The actuator is a very precise mechanical component and may not be damaged in order to guarantee its full function. It is advised to clean the lens gently (don’t press too hard) with a soft and clean cotton bud moistened with the special lens cleaner.

The direction of cleaning must be in the way as indicated in the picture below.

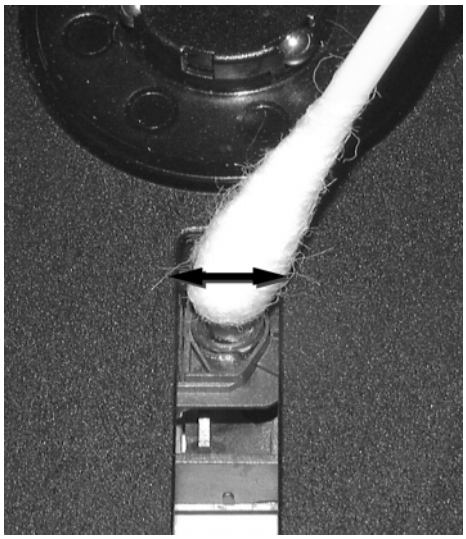

HANDLING CHIP COMPONENTS

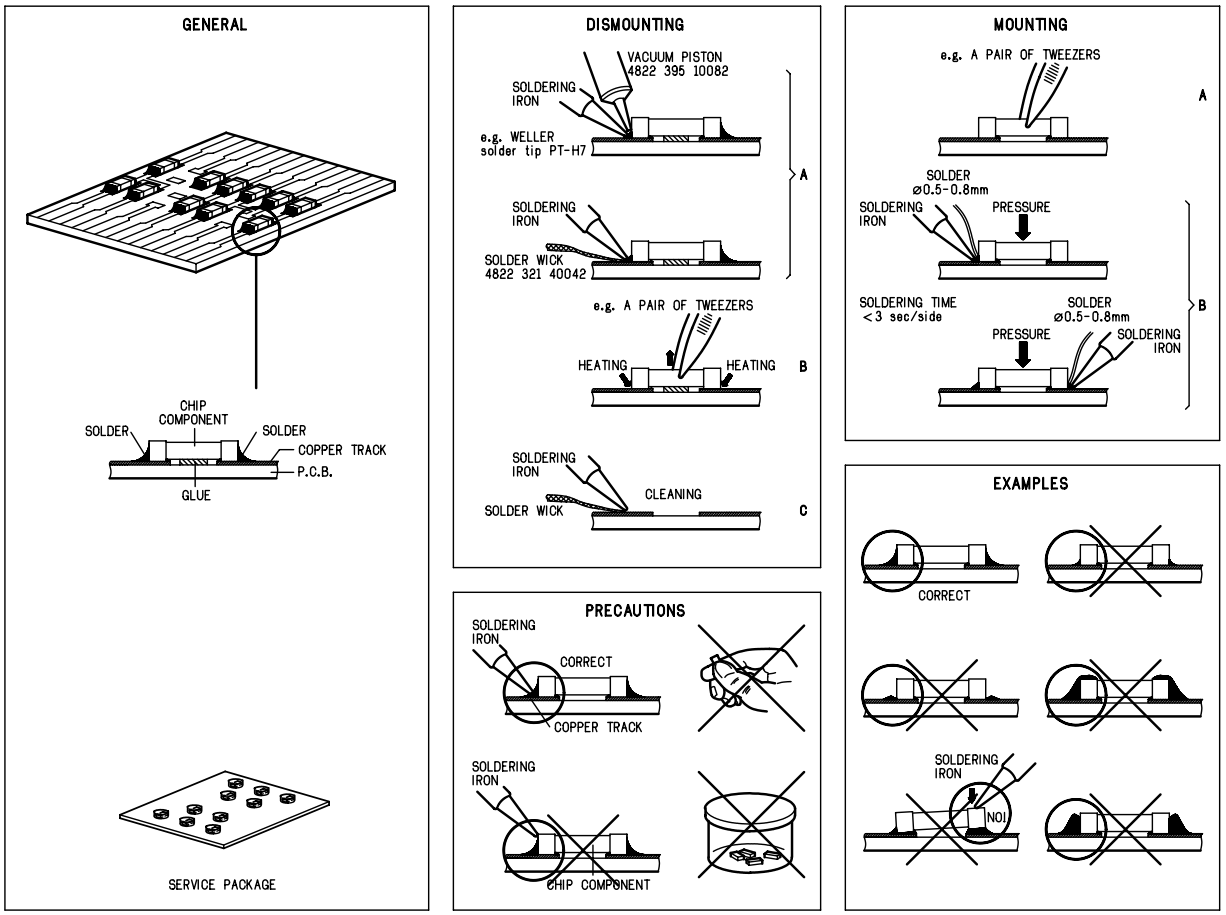

SERVICE TOOLS

Audio signal disc SBC429	4822 397 30184
Playability test disc SBC444	4822 397 30245
Test disc 5 (disc without errors) + **Test disc 5A** (disc with dropout errors, black spots and fingerprints) **SBC426/SBC426A**	4822 397 30096

ESD PROTECTION EQUIPMENT

Anti-static table mat large 1200x650x1.25mm	4822 466 10953
small 600x650x1.25mm	4822 466 10958
Anti-static wristband	4822 395 10223
Connection box (3 press stud connections, 1MΩ)	4822 320 11307
Extendible cable (2m, 2MΩ, to connect wristband to connection box)	4822 320 11305
Connecting cable (3m, 2MΩ, to connect table mat to connection box)	4822 320 11306
Earth cable (1MΩ, to connect any product to mat or to connection box)	4822 320 11308
KIT ESD3 (combining all 6 prior products - small table mat)	4822 310 10671
Wristband tester	4822 344 13999

PIN DESCRIPTION OF INTEGRATED CIRCUITS

TDA1300T – HF-PREAMPLIFIER AND LASER SUPPLY CIRCUIT (part of CD-drive VAM2103/08)

Pin	*Name*	*Direction*	*Description*
1	O4	HF-preamp → CD10	output of current amplifier 4
2	O6	HF-preamp → CD10	output of current amplifier 6
3	O3	HF-preamp → CD10	output of current amplifier 3
4	O1	HF-preamp → CD10	output of current amplifier 1
5	O5	HF-preamp → CD10	output of current amplifier 5
6	O2	HF-preamp → CD10	output of current amplifier 2
7	LDON	CD10 → HF-preamp	control pin for switching the laser on/off
8	VDDL	+2.7	laser supply voltage
9	VRFE	HF-preamp →	equalized output voltage of sum signal of amplifiers 1...4
10	VRF	HF-preamp →	unequalized output
11	HG	GND	control pin for gain switch
12	LS	CD10 → HF-preamp	control pin for double speed switch (switches equalization)
13	C	external connection	external capacitor (bandwidth of ALPC)
14	ADJ	→ HF-preamp	reference input
15	GND	GND	0V supply, substrate connection
16	LO	HF-preamp → laser diode	current output to laser diode
17	MI	monitor diode → HF-preamp	laser monitor diode input
18	VDD	+3	positive supply voltage
19	I2	GND	photo detector input 2 (not used)
20	I5	diode array → HF-preamp	photo detector input 5 (satellite)
21	I1	diode array → HF-preamp	photo detector input 1 (central)
22	I3	diode array → HF-preamp	photo detector input 3 (central)
23	I6	diode array → HF-preamp	photo detector input 6 (satellite)
24	I4	diode array → HF-preamp	photo detector input 4 (central)

MPC17A50VM – 4-CHANNEL H-BRIDGE SERVODRIVER

Pin	*Name*	*Direction*	*Description*
1	CGND	GND	ground (control part)
2	VLG	+2.7	power supply input (control part)
3	ERR2	CD10 → servo driver	error level input (slide error signal)
4	NI2	→ servo driver	filter capacitor connection in ABS amp circuit section
5	OP2	→ servo driver	filter capacitor connection in ABS amp circuit section
6	ERR1	CD10 → servo driver	error level input (focus error signal)
7	NI1	→ servo driver	filter capacitor connection in ABS amp circuit section
8	OP1	→ servo driver	filter capacitor connection in ABS amp circuit section
9	LIM	→ servo driver	limit control level signal input
10	VR	→ servo driver	control reference voltage input (VR=VLG/2)
11	CLK	→ servo driver	clock signal input
12	OP3	→ servo driver	filter capacitor connection in ABS amp circuit section
13	NI3	→ servo driver	filter capacitor connection in ABS amp circuit section
14	ERR3	CD10 → servo driver	error level input (radial error signal)
15	OP4	→ servo driver	filter capacitor connection in ABS amp circuit section
16	NI4	→ servo driver	filter capacitor connection in ABS amp circuit section
17	ERR4	CD10/µP → servo driver	error level input (motor speed error signal)
18	PHSW	GND	CH4 mode setup (if PHSW=high, CH4 operates half-bridge)
19	POL	CD10 →	CH4 polarity monitor output
20	CFL4	→ servo driver	pin for connecting filter for capacitor
21	CFL3	→ servo driver	pin for connecting filter for capacitor
22	OUT4A	servo driver → disc motor	H-bridge output A
23	OUT4B	servo driver → disc motor	H-bridge output B
24	VIN34	+A	CH3 and CH4 output stage power supply
25	OUT3B	servo driver → track actuator	H-bridge output B
26	PGND34	GND	CH3 and CH4 output stage ground
27	OUT3A	servo driver → track actuator	H-bridge output A
28	OUT1A	servo driver → focus actuator	H-bridge output A
29	PGND12	GND	CH1 and CH2 output stage ground
30	OUT1B	servo driver → focus actuator	H-bridge output B
31	VIN12	+A	CH1 and CH2 output stage power supply
32	OUT2B	servo driver → slide motor	H-bridge output B
33	OUT2A	servo driver → slide motor	H-bridge output A
34	CFL1	→ servo driver	pin for connecting filter for capacitor
35	CFL2	→ servo driver	pin for connecting filter for capacitor
36	VG	VG	power supply input (predriver circuit)

SAA7324 – DECODER, DIGITAL SERVO IC AND D/A-CONVERTER CD10 (low voltage version)

Pin	*Name*	*Direction*	*Description*
1	HFREF	→ CD10	comparator common mode input
2	HFIN	→ CD10	comparator signal input
3	ISLICE	CD10 →	current feedback from data slicer
4	VSSA1	GND	analog ground 1
5	VDDA1	+2.7	analog supply voltage 1
6	IREF	CD10 →	reference current output pin
7	VRIN	CD10 →	reference voltage for servo ADC's
8	D1	HF-preamp → CD10	unipolar current input (central diode signal input)
9	D2	HF-preamp → CD10	unipolar current input (central diode signal input)
10	D3	HF-preamp → CD10	unipolar current input (central diode signal input)
11	D4	HF-preamp → CD10	unipolar current input (central diode signal input)
12	R1	HF-preamp → CD10	unipolar current input (satellite diode signal input)
13	R2	HF-preamp → CD10	unipolar current input (satellite diode signal input)
14	VSSA2	GND	analog ground 2
15	CROUT	CD10 → X-TAL	crystal/resonator output
16	CRIN	X-TAL → CD10	crystal/resonator input
17	VDDA2	+2.7	analog supply voltage 2
18	LN	CD10 →	DAC left channel differential output - negative
19	LP	CD10 →	DAC left channel differential output - positive
20	VNEG	→ CD10	DAC negative reference input
21	VPOS	→ CD10	DAC positive reference input
22	RN	CD10 →	DAC right channel differential output - negative
23	RP	CD10 →	DAC right channel differential output - positive
24	SELPLL	+2.7	selects whether internal clock multiplier PLL is used
25	TEST1	GND	test control input 1; this pin should be tied low
26	CL16	CD10 →	16.9344 MHz system clock output
27	DATA	CD10 → NPC	serial data output (3-state)
28	WCLK	CD10 → NPC	word clock output (3-state)
29	SCLK	CD10 → NPC	serial bit clock output (3-state)
30	EF	CD10 →	C2 error flag output (3-state)
31	TEST2	GND	test control input 2; this pin should be tied low
32	KILL	CD10 → HF-preamp	kill output (programmable; open-drain)
33	VSSD1	GND	digital ground 2
34	V2/V3	CD10 → NPC	versatile I/O: input versatile pin 2 or output versatile pin 3 (open-drain)
35	WCLI	NPC → CD10	word clock input (for data loopback to DAC)
36	SDI	NPC → CD10	serial data input (for data loopback to DAC)
37	SCLI	NPC → CD10	serial bit clock input (for data loopback to DAC)
38	RESETn	µP → CD10	power-on reset input (active low)
39	SDA	µP ↔ CD10	microcontroller interface data I/O line (open-drain output)
40	SCL	µP → CD10	microcontroller interface clock line input
41	RAB	µP → CD10	microcontroller interface R/W and load control line input (4-wire bus mode)
42	SILD	µP → CD10	microcontroller interface R/W and load control line input (4-wire bus mode)
43	STATUS	CD10 →	servo interrupt request line/decoder status register output (open-drain)
44	TEST3	GND	test control input 3; this pin should be tied low
45	RCK	→ CD10	subcode clock input
46	SUB	CD10 →	P-to-W subcode bits output (3-state)
47	SFSY	CD10 → µP	subcode frame sync output (3-state)
48	SBSY	CD10 → NPC	subcode block sync output (3-state)
49	CL11/4	CD10 →	11.2896 MHz or 4.2336 MHz (for microcontroller) clock output
50	VSSD2	GND	digital ground 3
51	DOBM	CD10 →	bi-phase mark output (externally buffered; 3-state)
52	VDDD1P	+2.7	digital supply voltage 2 for periphery
53	CFLG	CD10 →	correction flag output (open-drain)
54	RA	CD10 → servo driver	radial actuator output
55	FO	CD10 → servo driver	focus actuator output
56	SL	CD10 → servo driver	slide control output
57	VDDD2C	+2.7	digital supply voltage 3 for core
58	VSSD3	GND	digital ground 4
59	MOTO1	CD10 → servo driver	motor output 1; versatile (3-state)
60	MOTO2	CD10 →	motor output 2; versatile (3-state)
61	V4	CD10 → HF-EQ switch	versatile output pin 4
62	V5	CD10 → HF-GAIN switch	versatile output pin 5
63	V1	innerswitch → CD10	versatile input pin 1
64	LDON	CD10 → HF-preamp	laser drive on output (open-drain)

SM5903BF – COMPRESSION-TYPE ANTI-SHOCK MEMORY CONTROLLER NPC

Pin	*Name*	*Direction*	*Description*
1	VDD	+2.7	supply voltage
2	UC1	NPC ↔	µP interface extension I/O line 1
3	UC2	NPC ↔	µP interface extension I/O line 2
4	UC3	NPC ↔	µP interface extension I/O line 3
5	UC4	NPC ↔	µP interface extension I/O line 4
6	UC5	NPC ↔	µP interface extension I/O line 5
7	TEST1/DIT	NPC →	digital audio interface output
8	TEST2	+2.7	test pin
9	CLK	CD10 → NPC	16.9344MHz clock input
10	VSS	GND	ground
11	YSRDATA	CD10 → NPC	audio serial data input
12	YLRCK	CD10 → NPC	audio serial L/R clock input
13	YSCK	CD10 → NPC	audio serial bit clock input
14	ZSCK	NPC → CD10	audio serial bit clock output
15	ZLRCK	NPC → CD10	audio serial L/R clock output
16	ZSRDATA	NPC → CD10	audio serial data output
17	YFLAG	CD10 → NPC	signal processor IC RAM overflow flag
18	YFCLK	GND	crystal-controlled frame clock input
19	YBLKCK	CD10 → NPC	subcode block clock signal output
20	RESET	µP → NPC	system reset input (active low)
21	ZSENSE	NPC → µP	µP interface status output
22	VDD2	+3	supply voltage
23	YDMUTE	GND	forced mute input
24	YMLD	µP → NPC	µP interface latch clock input
25	YMDATA	µP → NPC	µP interface serial data input
26	YMCLK	µP → NPC	µP interface shift clock input
27	OE	NPC → DRAM	DRAM OE control output (active low)
28	CAS	NPC → DRAM	DRAM CAS control output (active low)
29	D2	NPC ↔ DRAM	DRAM data input/output 2
30	D3	NPC ↔ DRAM	DRAM data input/output 3
31	D0	NPC ↔ DRAM	DRAM data input/output 0
32	D1	NPC ↔ DRAM	DRAM data input/output 1
33	WE	NPC → DRAM	DRAM WE control output (active low)
34	RAS	NPC → DRAM	DRAM RAS control output (active low)
35	A9	NPC → DRAM	DRAM address output 9
36	A8	NPC → DRAM	DRAM address output 8
37	A7	NPC → DRAM	DRAM address output 7
38	A6	NPC → DRAM	DRAM address output 6
39	A5	NPC → DRAM	DRAM address output 5
40	A4	NPC → DRAM	DRAM address output 4
41	A0	NPC → DRAM	DRAM address output 0
42	A1	NPC → DRAM	DRAM address output 1
43	A2	NPC → DRAM	DRAM address output 2
44	A3	NPC → DRAM	DRAM address output 3

TA2120FN – Stereo Headphone Amplifier

Pin	*Name*	*Direction*	*Description*
1	DBB NF	→ headphone-amp	NF of DBB amplifier
2	ADD OUT	headphone-amp →	output of ADD amplifier
3	RF IN	→ headphone-amp	terminal for ripple filter circuit
4	PWC	→ headphone-amp	center amplifier on/off switch (open = on)
5	VCC	+A/2.7	positive supply voltage
6	B	headphone-amp → HP-socket	output of power amplifier
7	C	headphone-amp → HP-socket	output of center amplifier
8	A	headphone-amp → HP-socket	output of power amplifier
9	GND	GND	ground of power amplifier
10	MIX OUT	headphone-amp →	output of power amplifier (mixed)
11	ALC IN	→ headphone-amp	input terminal for ALC detector circuit
12	ALC DET	→ headphone-amp	smoothing for ALC detection (GND = ALC off, open = ALC ON)
13	ATT	→ headphone-amp	power amplifier gain switch (open/VCC = ATT off, GND = ATT on)
14	IN A	→ headphone-amp	input of power amplifier
15	IN B	→ headphone-amp	input of power amplifier
16	GND	GND	ground of input stage in power amplifier
17	BEEP IN	µP → headphone-amp	input terminal for beep sound
18	MUTE TC	→ headphone-amp	terminal for mute smoothing
19	MUTE SW	CD10/µP → headphone-amp	power mute switch (GND/open = mute off, VCC = mute on)
20	POWER	→ headphone-amp	power switch (VCC = power on, GND/open = power off)
21	BIAS	headphone-amp →	BIAS voltage
22	BIAS IN	→ headphone-amp	filter terminal for BIAS circuit
23	DBB SW	µP → headphone-amp	DBB on/off switch (open/VCC = DBB on, GND = DBB off)
24	DBB OUT	headphone-amp →	Output of DBB amplifier (terminal for filter)

START-UP PROCEDURE – FLOW CHART

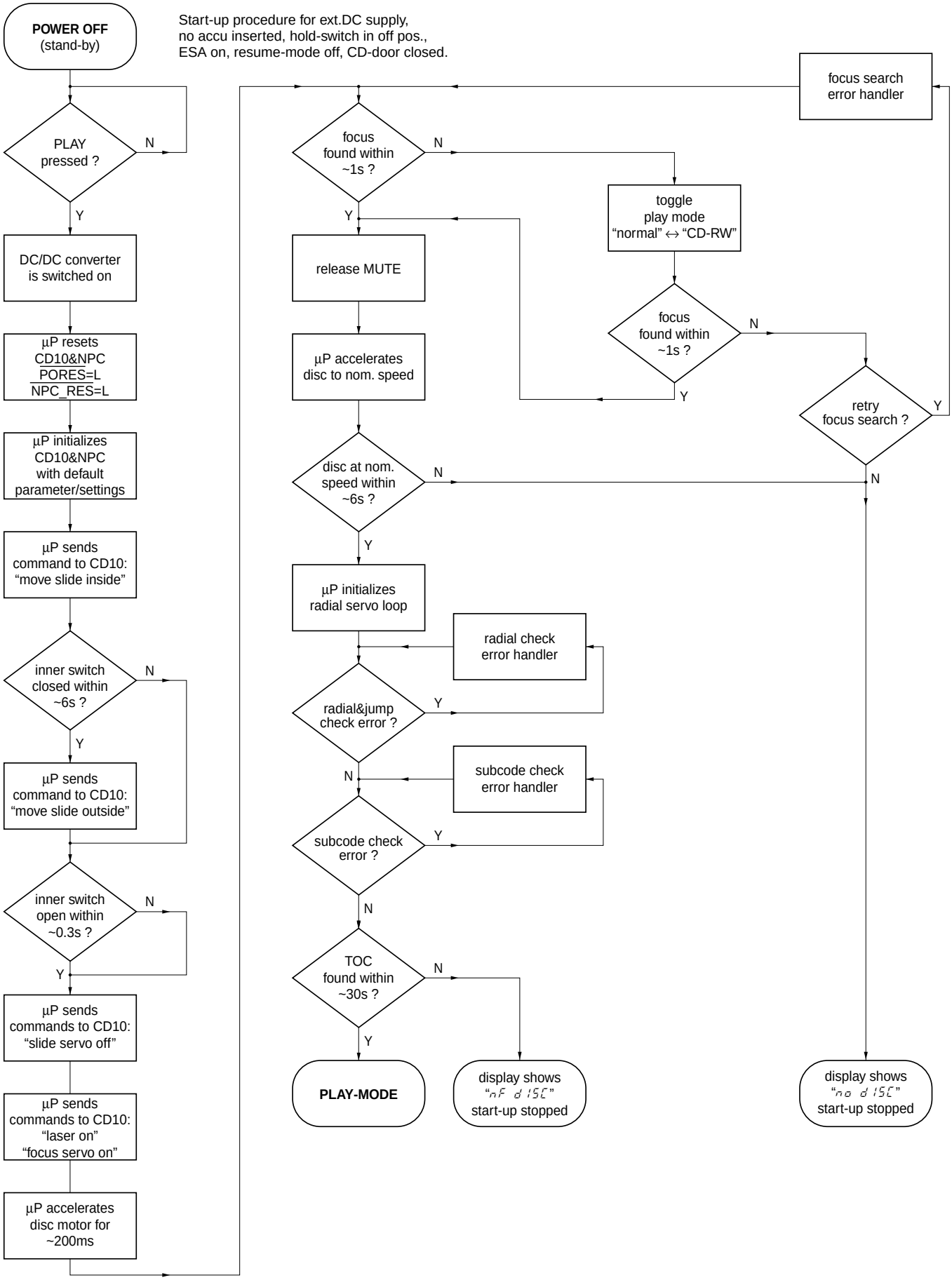

SERVICE TEST PROGRAM

1. PRELIMINARY SETUP
- To enter the service test program open the CD-door and hold the buttons “MODE” & “NEXT” depressed while turning POWER ON (i.e. connecting the AC/DC adaptor).
- The display shows the software version of the built-in µP (i.e. “5 - 13”). Versions are counted from “00” onwards; that means the higher the number the newer the software.
- The program is now in the main menu – various tests can be entered by pressing the corresponding buttons (see flow chart on next page or detailed description of available tests below).
- To exit the service test program press the “STOP“ button or disconnect the set from the power source.

2. DISPLAY TEST
Purpose: Check functionality of display and display driver.
- To enter the display test start the service test program and press the “NEXT” button.
- The display shows test pattern1. All segments are activated for finding open circuits (see flow chart on next page).
- To jump to the next pattern press the “NEXT” button.
- The display shows test pattern2. All alternate pins (2, 4, ...) are activated for finding short circuits (see flow chart on next page).
- To jump back to test pattern1 press the “NEXT” button, to exit the display test and return to the main menu press the “STOP” button.

3. KEY TEST
Purpose: Check operation of keys and cord remote control.
- To enter the key test start the service test program and press the “MODE” button.
- The display shows “- -”.
- Hold key depressed and check corresponding key code on the display. Key codes can be found in table1 (see flow chart on next page).
- To exit the key test and return to the main menu press the “STOP” button.

4. PLAYBACK TEST WITH ERROR ANALYSIS
Purpose: Analyze errors that occur during playback and search for intermittent failures.
- To enter the playback test start the service test program and press the “DBB” button.
- To start the error analysis press the “PLAY” button. Note that the playback test can only be entered if the CD-door is closed.
- The set will read the TOC and start playback.

As long as the playback is free of errors the display shows track and time information like in normal play-mode. In case of errors corresponding error codes will be displayed. The meaning of these error codes can be found in table2 (see flow chart on next page).

Note: Errors can either be *“fatal”* or *“non fatal”*. Fatal errors always stop the playback, non fatal errors only cause a short interruption of the music. Fatal errors are displayed as long as the set is connected to the power source, non fatal errors are displayed until a new error occurs or a button is pressed.

- To stop the playback test disconnect the set from the power source.

5. SERVO TEST
Purpose: Check door switch, inner switch of CD-drive, movement of slide and acceleration of discmotor.
- To enter the servo test start the service test program and press the “PLAY” button.
- The display shows “5 *xy*”.
  “*x*” indicates state of door switch;
  “*y*” indicates state of inner switch.
  x,y = “0” means switch is closed; “1” means switch is open.
- To move slide outside hold the “NEXT” button depressed.
- To move slide inside hold the “PREV” button depressed.
- To accelerate the discmotor clockwise hold the “MODE” button depressed.
- To accelerate the discmotor counter-clockwise hold the “PROG” button depressed.
- To enter the focus test press the “PLAY” button, to exit the servo test and return to the main menu press the “STOP” button.

6. FOCUS TEST
Purpose: Check movement of lens and operation of focus servo in “normal” and “CD-RW compatible” mode.

> Since the CD-RW reflects much less light than an ordinary CD-A, the gain of the HF-amplifier stage and the sensitivity of the ADC inside the signal processor “CD10” must be increased.
> The gain is switched via the HF-GAIN line (pin62 of CD10),
> the ADC-sensitivity is switched via software (µP → CD10).
> During start-up the correct mode is choosen automatically;
> in the service test program it can be switched manually in order to allow individual measurements in both conditions.

- The focus servo loop is switched on and the set starts searching the focus (“focus ramping”). As soon as the focus has been found the focus servo loop is closed and the state of the focus is monitored continuously.
- If the focus is OK the display shows “ F”, else “-F”.
- The ESP-flag indicates the playback mode.
  ESP-flag off means “normal” playback mode (default setting).
  ESP-flag on means “CD-RW compatible” playback mode.
- To toggle between playback modes press the “DBB” button.
- To move slide outside hold the “NEXT” button depressed.
- To move slide inside hold the “PREV” button depressed.
- To accelerate the discmotor clockwise hold the “MODE” button depressed.
- To accelerate the discmotor counter-clockwise hold the “PROG” button depressed.
- In case the focus is OK the discmotor test can be entered by pressing the “PLAY” button, to exit the focus test and return to the main menu press the “STOP” button.

7. DISCMOTOR TEST
Purpose: Check speed regulation of discmotor.
- The speed regulation is switched on and the discmotor starts rotating. If the speed reaches 75% of the nom. speed the display shows “ d”, else “-d”.
- In parallel also the state of the focus is monitored continuously (display “ F” or “-F”).
- In case the disc speed is OK and the focus is OK the radial test can be entered by pressing the “PLAY” button, to exit the discmotor test and return to the main menu press the “STOP” button.

8. RADIAL TEST
Purpose: Check if radial loop locks and an audio signal is audible at the headphone output.
- The radial servo loop is switched on, mute is released and the audio signal is audible. If the system is on track the display shows “ r”, else “-r”.
- In parallel also the disc speed (display “ d” or “-d”) and the state of the focus (display “ F” or “-F”) are monitored continuously.
  Note: In case of radial errors the audio output is muted and muting is not released automatically when the systems recovers from the error. “-r” remains on the display.
  To open mute again press the “NEXT” or “PREV” button.
- To jump 10 tracks outside press the “NEXT” button.
- To jump 10 tracks inside press the “PREV” button.
- To exit the radial test and return to the main menu press the “STOP” button, to exit the service test program disconnect the set from the power source.

Important remark:
In radial test mode data to the DRAM is written at 1.2 times the nominal speed, and read from the DRAM at nominal speed.
Because writing is done faster than reading the DRAM gets full after a certain time.
In normal play mode the system would now wait until the DRAM is partly emptied again, jump backwards and resume filling at the last written position. However, in radial test mode the jumps would disturb measurements on the radial servo loop.
Therefore this function has been disabled and filling restarts immediately from the current position of the pick-up unit. As a result “jumps” are audible during playback.

3-7

SERVICE TEST PROGRAM – FLOW CHART

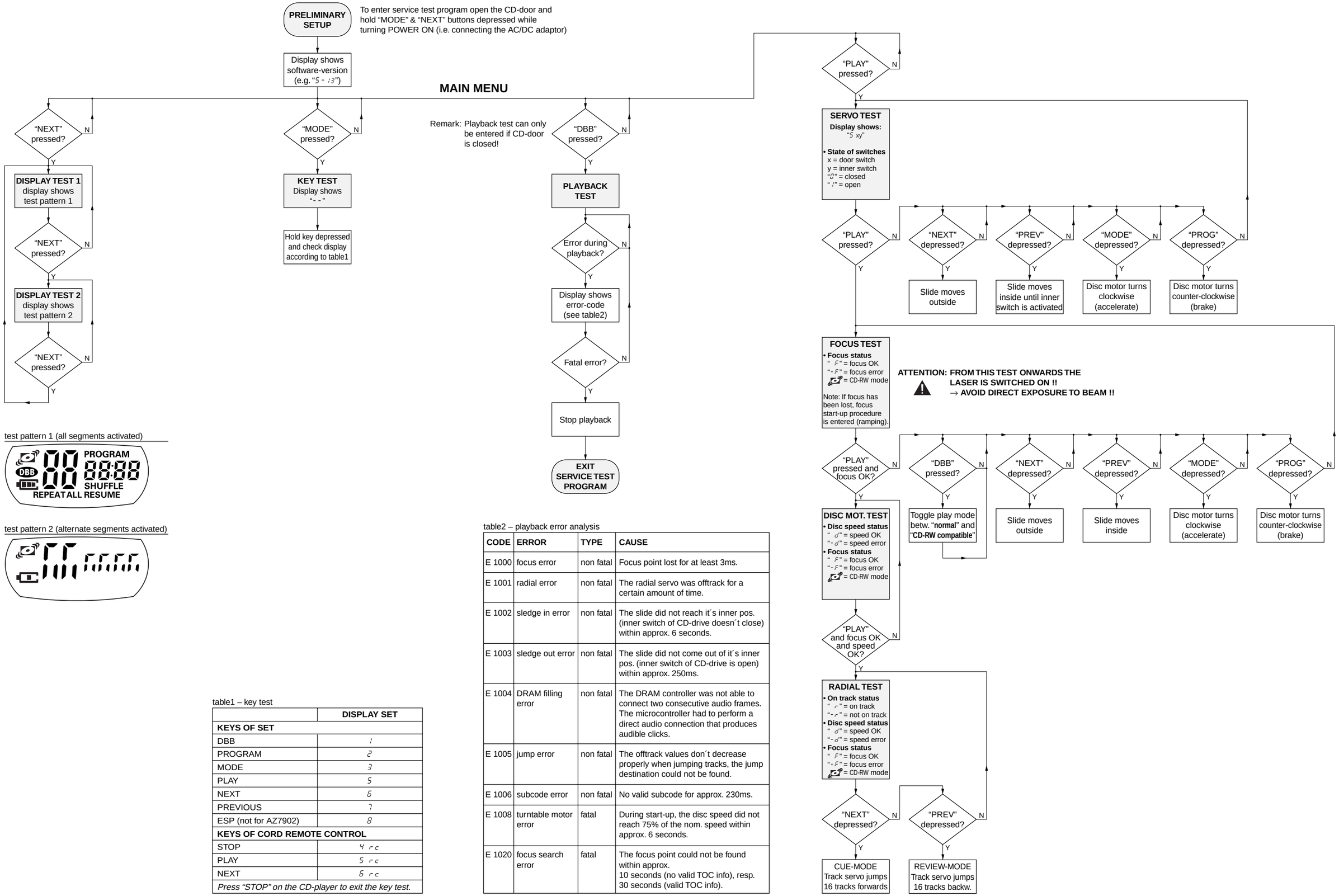

table1 – key test

	DISPLAY SET
KEYS OF SET	
DBB	1
PROGRAM	2
MODE	3
PLAY	5
NEXT	6
PREVIOUS	7
ESP (not for AZ7902)	8
KEYS OF CORD REMOTE CONTROL	
STOP	4 rc
PLAY	5 rc
NEXT	6 rc
Press “STOP” on the CD-player to exit the key test.	

table2 – playback error analysis

CODE	ERROR	TYPE	CAUSE
E 1000	focus error	non fatal	Focus point lost for at least 3ms.
E 1001	radial error	non fatal	The radial servo was offtrack for a certain amount of time.
E 1002	sledge in error	non fatal	The slide did not reach it´s inner pos. (inner switch of CD-drive doesn´t close) within approx. 6 seconds.
E 1003	sledge out error	non fatal	The slide did not come out of it´s inner pos. (inner switch of CD-drive is open) within approx. 250ms.
E 1004	DRAM filling error	non fatal	The DRAM controller was not able to connect two consecutive audio frames. The microcontroller had to perform a direct audio connection that produces audible clicks.
E 1005	jump error	non fatal	The offtrack values don´t decrease properly when jumping tracks, the jump destination could not be found.
E 1006	subcode error	non fatal	No valid subcode for approx. 230ms.
E 1008	turntable motor error	fatal	During start-up, the disc speed did not reach 75% of the nom. speed within approx. 6 seconds.
E 1020	focus search error	fatal	The focus point could not be found within approx. 10 seconds (no valid TOC info), resp. 30 seconds (valid TOC info).

3-8

BLOCKDIAGRAM

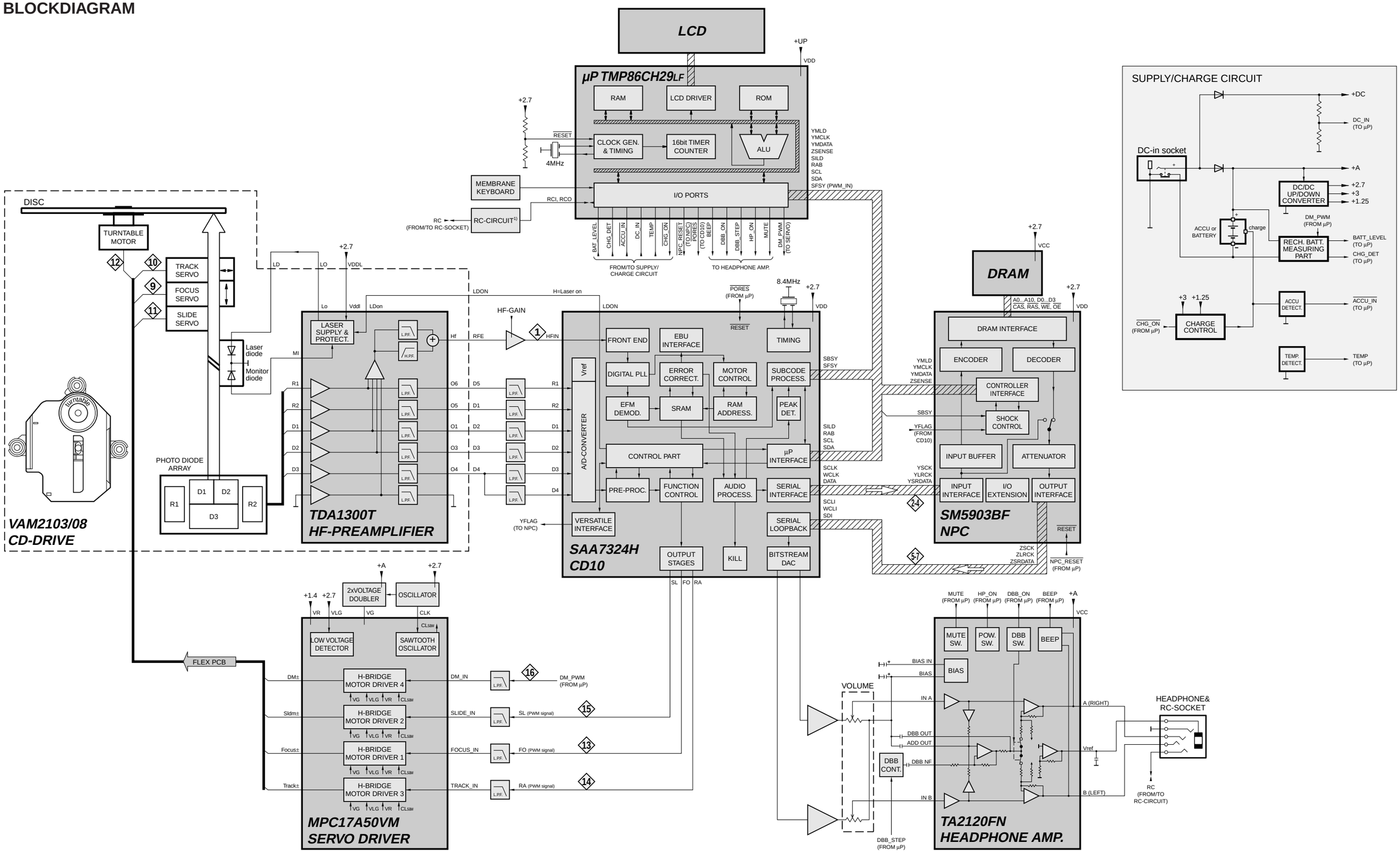

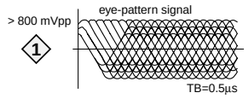

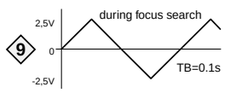

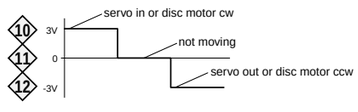

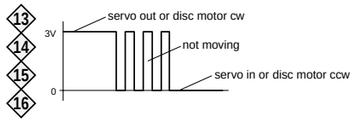

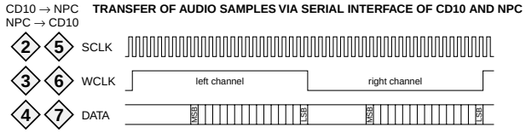

1) not on all versions

4-1

1350 H17	2305 I7	2313 I9	2356 H14	2363 I16	2370 J11	2806 E5	2813 B5	2820 A10	2827 F7	2872 B16	2954 H2	2961 I2	2969 E3	3303 I7	3312 J9	3320 G11	3352 I11	3360 J14	3367 J7	3807 C4	3814 A7	3821 A10	3829 F8	3836 B5	3853 F14	3873 C15	3880 B17	3894 A6	3957 I5	5802 F8	7300-B H8	7355 I16	7892 F16
1800 B1	2306 H9	2350 H11	2357 H15	2364 I17	2800 E4	2807 E5	2814 B5	2821 A10	2850 E13	2890 A5	2955 H1	2962 J2	2970 F2	3304 G8	3313 J8	3321 H11	3353 I15	3361 I11	3800 D4	3808 B4	3815 A8	3822 E10	3830 F9	3837 B6	3854 F15	3874 C15	3881 E17	3895 F16	3958 J5	5806 D2	7301 J8	7356 D2	7950 F4
1950 G1	2307 I8	2351 H11	2358 G11	2365 I13	2801 E4	2808 D2	2815 B5	2822 D11	2852 F16	2891 A5	2956 A11	2963 J5	2971 E2	3305 H7	3314 J16	3322 G12	3354 I15	3362 H11	3801 D4	3809 C5	3816 A10	3823 C10	3831 F9	3838 D2	3855 F16	3875 C15	3882 G15	3951 H4	3959 J5	5834 E6	7302 J9	7357 I16	7958-A H5
1951 J1	2308 I9	2352 I11	2359 H11	2366 I14	2802 E4	2809 B4	2816 B6	2823 F6	2853 D17	2950 I4	2957 A11	2964 J5	2972 I4	3308 H8	3315 H8	3323 H12	3355 H15	3363 J16	3802 D4	3810 B5	3817 A9	3824 C10	3832 E10	3839 B17	3856 F17	3876 C15	3890 A5	3952 I5	5900 A9	6350 I16	7350 G12	7850 C14	7958-B J6
2300 G8	2309 J7	2353 I11	2360 I15	2367 J14	2803 E4	2810 C4	2817 A8	2824 F7	2854 C16	2951 G4	2958 H6	2965 A11	3300 G11	3309 I7	3316 I16	3324 I12	3356 H15	3364 J16	3803 D4	3811 B5	3818 A10	3825 C10	3833 F9	3850 C13	3870 B14	3877 C15	3891 A5	3953 H5	5901 E6	6351 E3	7351 I11	7870 B14	
2301 H7	2310 J16	2354 I11	2361 I15	2368 J14	2804 E5	2811 C5	2818 A9	2825 F7	2870 B14	2952 H4	2959 G2	2966 J2	3301 I7	3310 I9	3317 H9	3350 I10	3357 H17	3365 I14	3804 D4	3812 B6	3819 A10	3826 C11	3834 F6	3851 D13	3871 C14	3878 A16	3892 A5	3954 H6	5800 A9	6352 F2	7352 I14	7890 A5	
2304 H9	2312 H9	2355 J12	2362 H16	2369 G12	2805 E5	2812 C5	2819 A10	2826 F7	2871 B16	2953 I1	2960 G2	2968 F3	3302 H8	3311 I7	3318 I8	3351 I10	3359 J15	3366 J8	3805 D4	3813 C6	3820 A10	3827 C11	3835 F7	3852 E13	3872 C14	3879 A16	3893 A6	3955 H6	5801 E6	7300-A H9	7353 J15	7891 A6	

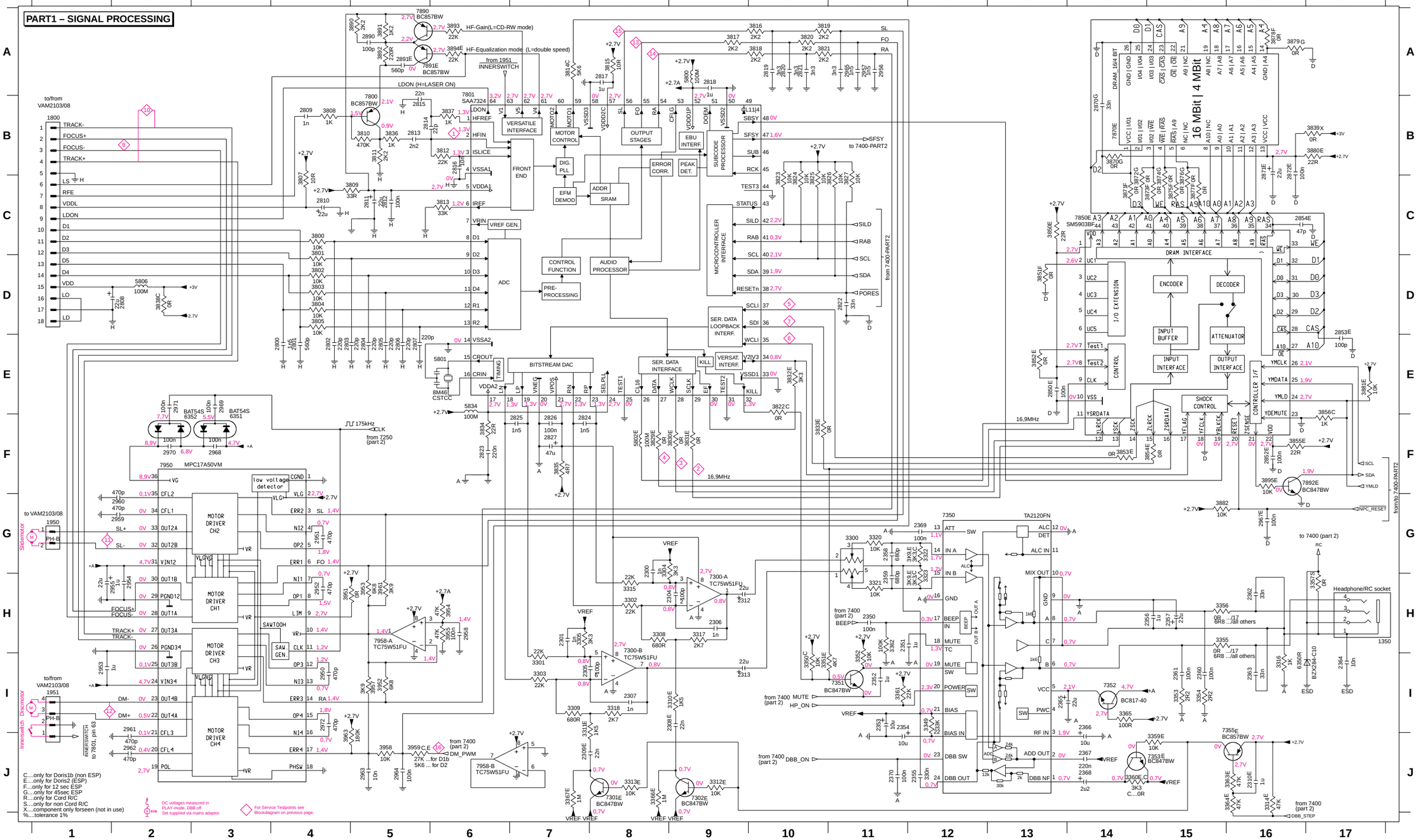

4-2

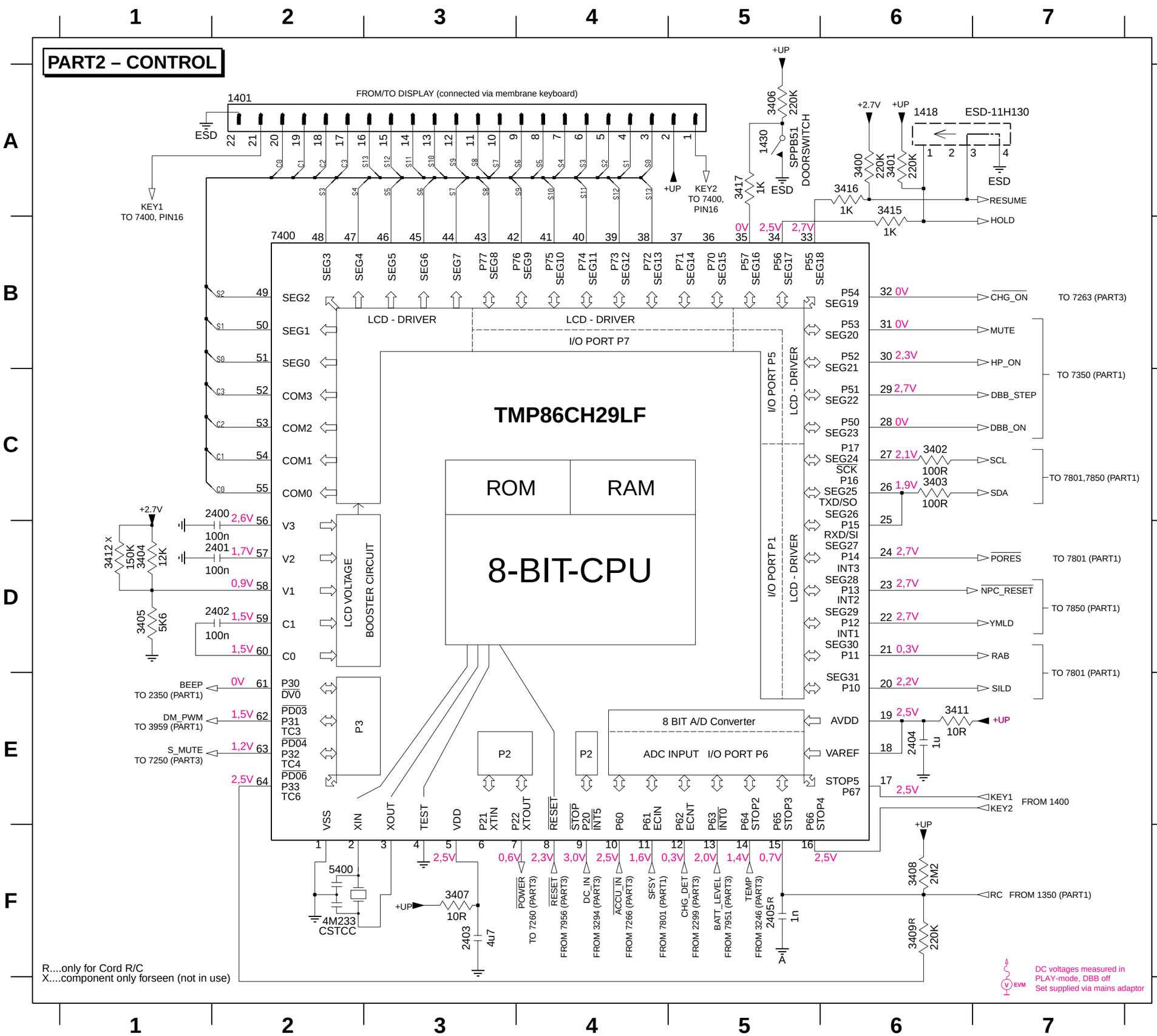

1401 A5
1418 A6
1430 A5
2400 C2
2401 D2
2402 D2
2403 F3
2404 E6
2405 F5
3400 A6
3401 A6
3402 C6
3403 C6
3404 D1
3405 D1
3406 A5
3407 F3
3408 F6
3409 F6
3411 E6
3412 D1
3415 A6
3416 A6
3417 A5
5400 F2
7400 B2

4-3

1250 B1	2255 B8	2262 B10	2271 E9	3230 D7	3237 D6	3244 E2	3251 B6	3258 B9	3265 C10	3278 E2	3285 B4	3292 C4	3299 C5	6254 B9	7250-A A9	7252 C9	7265 B3	7957 E7
1251 A3	2256 C9	2263 D9	2272 C1	3231 E7	3238 E6	3245 D4	3252 B7	3259 A9	3266 C9	3279 E1	3286 B5	3293 C4	5250 B8	6255 D10	7250-B A9	7253 B9	7266 E4	7959 A7
2243 E8	2257 B9	2264 D10	2274 D7	3232 D7	3239 D7	3246 D4	3253 A7	3260 C9	3267 E8	3280 E1	3287 B3	3294 A2	5251 B10	6256 B9	7250-C A10	7260 D6	7267 D4	7961 E7
2251 B7	2258 A9	2266 D10	2275 B4	3233 D7	3240 E3	3247 E8	3254 C6	3261 C10	3268 D3	3281 E2	3288 B3	3295 A2	6250 A2	6258 C1	7250-D B7	7262-A E1	7951-A B4	7962 E8
2252 A7	2259 A10	2267 D1	2276 B9	3234 E8	3241 E4	3248 E8	3255 C6	3262 C10	3270 D4	3282 E3	3289 C3	3296 B4	6251 B6	6261 A2	7250-E C7	7262-B B5	7951-B C10	
2253 A8	2260 B10	2268 E2	2277 A3	3235 E8	3242 E3	3249 E8	3256 C7	3263 B10	3276 D2	3283 E3	3290 C4	3297 B5	6252 A7	6262 D9	7250-F A10	7263 E2	7955 D7	
2254 C7	2261 B10	2269 B5	2299 C5	3236 E9	3243 D3	3250 A5	3257 C8	3264 A10	3277 D2	3284 B4	3291 C3	3298 B4	6253 C6	6265 C9	7251 B6	7264 E3	7956 E8	

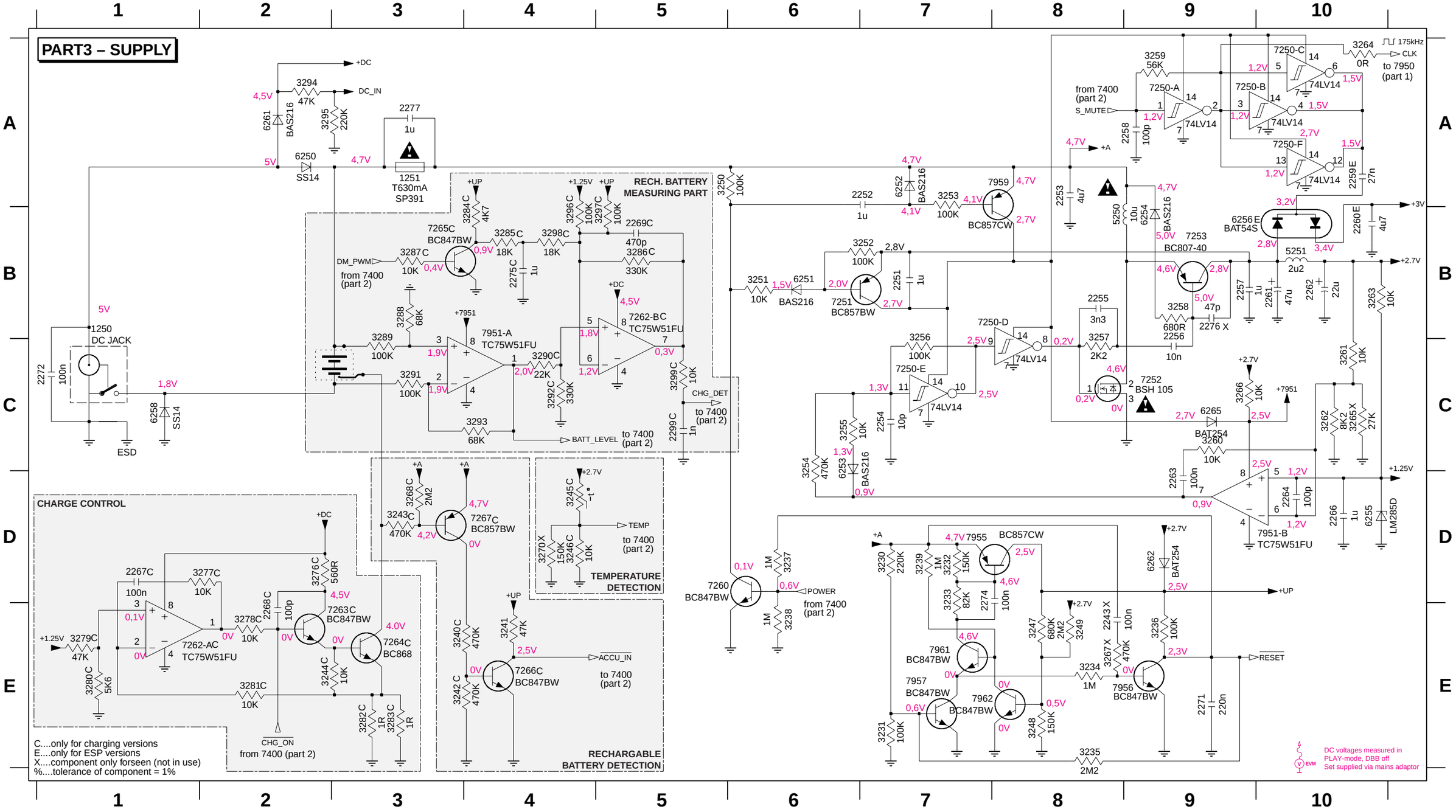

4-4

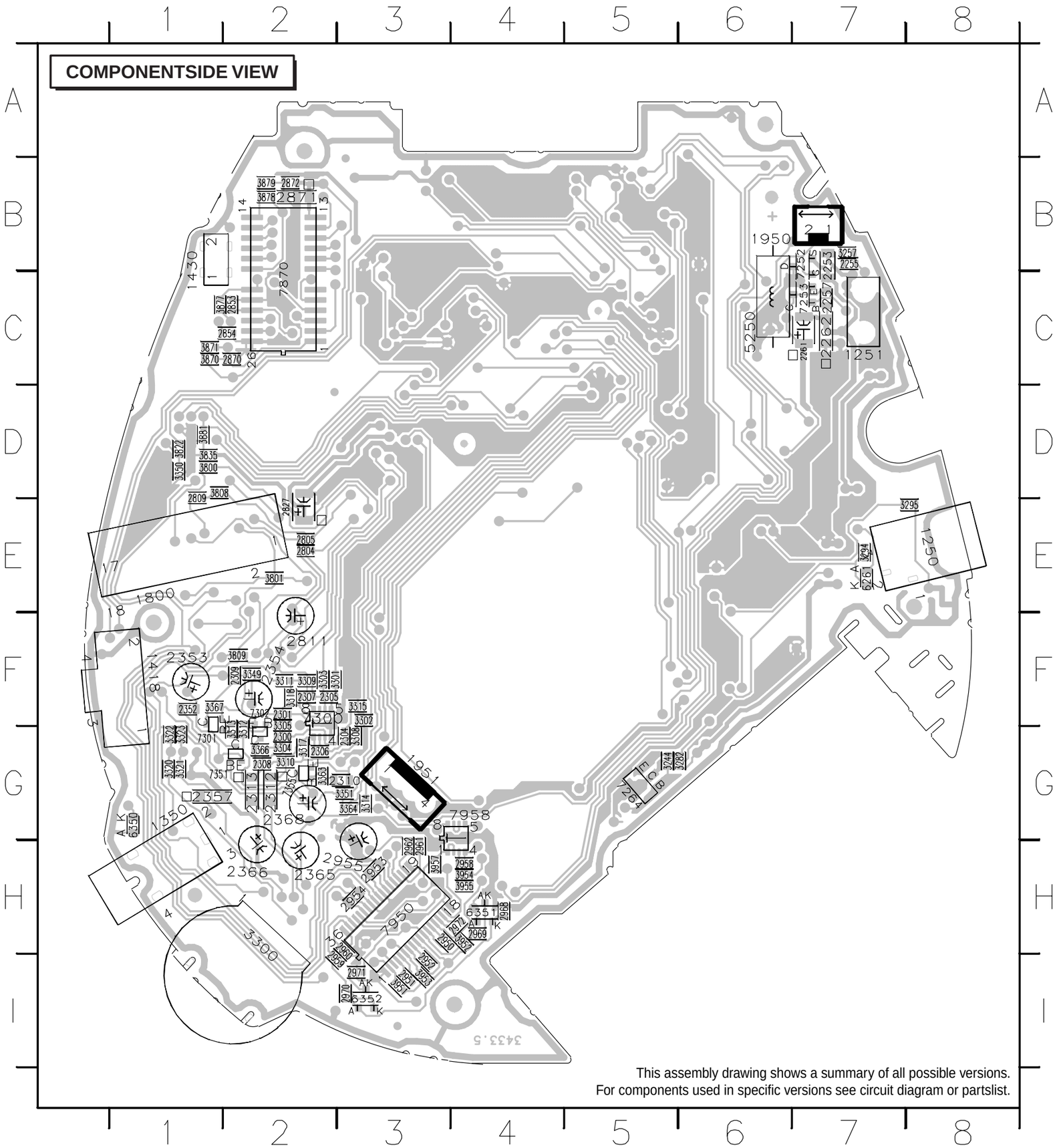

This assembly drawing shows a summary of all possible versions.
For components used in specific versions see circuit diagram or partslist.

1250	E8	2969	H4	3957	H3
1251	C7	2970	I3	5250	C6
1350	G1	2971	I3	6261	E7
1418	F1	2972	H4	6350	G1
1430	C1	3244	G5	6351	H4
1800	E1	3257	B7	6352	I3
1950	B6	3282	G6	7252	B7
1951	G3	3294	E7	7253	C7
2253	B7	3295	E8	7264	G5
2255	B7	3300	H2	7300	F2
2257	C7	3301	F2	7301	G1
2261	C7	3302	F3	7302	F2
2262	C7	3303	F2	7351	G1
2300	G2	3304	G2	7355	G2
2301	F2	3305	F2	7870	C2
2304	G3	3308	G3	7950	H3
2305	F2	3309	F2	7958	G4
2306	G2	3310	G2		
2307	F2	3311	F2		
2308	G2	3312	G2		
2309	F2	3313	G2		
2310	G3	3314	G3		
2312	G2	3315	F3		
2313	G2	3317	G2		
2352	F1	3318	F2		
2353	F1	3320	G1		
2354	F2	3321	G1		
2357	G1	3322	G1		
2365	H2	3323	G1		
2366	H2	3349	F2		
2368	G2	3350	D1		
2804	E2	3351	G3		
2805	E2	3363	G2		
2809	D1	3364	G3		
2811	F2	3366	G2		
2827	E2	3367	F1		
2853	C2	3800	D1		
2854	C2	3801	E2		
2870	C2	3808	D1		
2871	B2	3809	F2		
2872	B2	3822	D1		
2950	H3	3835	D1		
2951	I3	3870	C1		
2952	I3	3871	C1		
2953	H3	3877	C1		
2954	H3	3878	B2		
2955	H3	3879	B2		
2958	H4	3881	D1		
2959	I2	3951	I3		
2960	H3	3952	H4		
2961	H3	3953	I3		
2962	H3	3954	H4		
2968	H4	3955	H4		

4-5

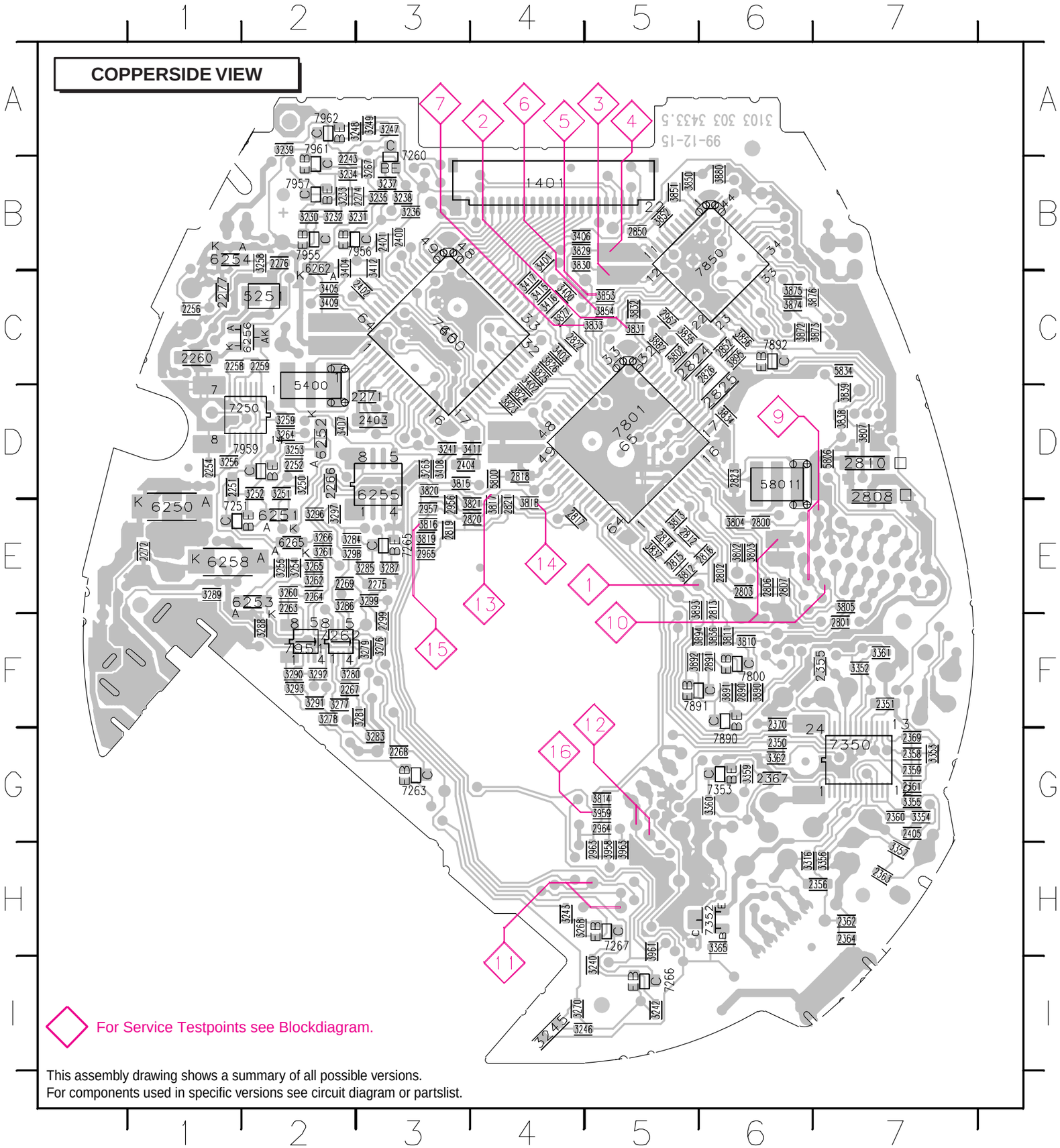

1401	B4	2815	E5	3263	D3	3416	C4	3895	C6
2243	A2	2816	E6	3264	D2	3417	C4	3958	G5
2251	D1	2817	E4	3265	E2	3802	E6	3959	G5
2252	D2	2818	D4	3266	E2	3803	E6	3961	H5
2254	D1	2819	E3	3267	B3	3804	E6	3963	G5
2256	C1	2820	E4	3268	H4	3805	E7	5251	C2
2258	C1	2821	D4	3270	I4	3807	D7	5400	C2
2259	C2	2822	C4	3276	F3	3810	F6	5800	D4
2260	C1	2823	D6	3277	F2	3811	F6	5801	D6
2263	E2	2824	C5	3278	F2	3812	E5	5802	C5
2264	E2	2825	C6	3279	F3	3813	E5	5806	D7
2266	D2	2826	C6	3280	F2	3814	G5	5834	C7
2267	F2	2850	B5	3281	F3	3815	D3	6250	D1
2268	G3	2852	C6	3283	F3	3816	E3	6251	E2
2269	E2	2890	F6	3284	E2	3817	D4	6252	D2
2271	D3	2891	F6	3285	E3	3818	D4	6253	E2
2272	E1	2956	D3	3286	E2	3819	E3	6254	B1
2274	B3	2957	E3	3287	E3	3820	D3	6255	D3
2275	E3	2963	G5	3288	F2	3821	D4	6256	C2
2276	B2	2964	G5	3289	E1	3823	D4	6258	E1
2277	C1	2965	E3	3290	F2	3824	D4	6262	B2
2299	E3	2967	C5	3291	F2	3825	C4	6265	E2
2350	G6	3230	B2	3292	F2	3826	C4	7250	D2
2351	F7	3231	B3	3293	F2	3827	C4	7251	D1
2355	F7	3232	B2	3296	E2	3829	B4	7260	A3
2356	H7	3233	B2	3297	E2	3830	B4	7262	F2
2358	G7	3234	B2	3298	E2	3831	C5	7263	G3
2359	G7	3235	B3	3299	E3	3832	C5	7265	E3
2360	G7	3236	B3	3316	H6	3833	C5	7266	I5
2361	G7	3237	B3	3352	F7	3834	D6	7267	H5
2362	H7	3238	B3	3353	G7	3836	F6	7350	G7
2363	H7	3239	A2	3354	G7	3837	E5	7352	H6
2364	H7	3240	H5	3355	G7	3838	D7	7353	G6
2367	G6	3241	D3	3356	H7	3839	C7	7400	C3
2369	G7	3242	I5	3357	G7	3850	B5	7800	F6
2370	F6	3243	H4	3359	G6	3851	B5	7801	D5
2400	B3	3245	I4	3360	G6	3852	B5	7850	B6
2401	B3	3246	I5	3361	F7	3853	C5	7890	G6
2402	C3	3247	A3	3362	G6	3854	C5	7891	F5
2403	D3	3248	A3	3365	H6	3855	C5	7892	C6
2404	D3	3249	A3	3400	C4	3856	C6	7951	F2
2405	G7	3250	D2	3401	B4	3872	C6	7955	B2
2800	E6	3251	D2	3402	C4	3873	C7	7956	B3
2801	E7	3252	D2	3403	C4	3874	C6	7957	B2
2802	E6	3253	D2	3404	B2	3875	C6	7959	D2
2803	E6	3254	E2	3405	C2	3876	C7	7961	A2
2806	E6	3255	E2	3406	B4	3880	B6	7962	A2
2807	E6	3256	D1	3407	D2	3882	C5		
2808	D7	3258	B2	3408	D3	3890	F6		
2810	D7	3259	D2	3409	C2	3891	F6		
2812	E5	3260	E2	3411	D4	3892	F5		
2813	E6	3261	E2	3412	B3	3893	E5		
2814	E5	3262	E2	3415	C4	3894	F6		

EXPLODED VIEW

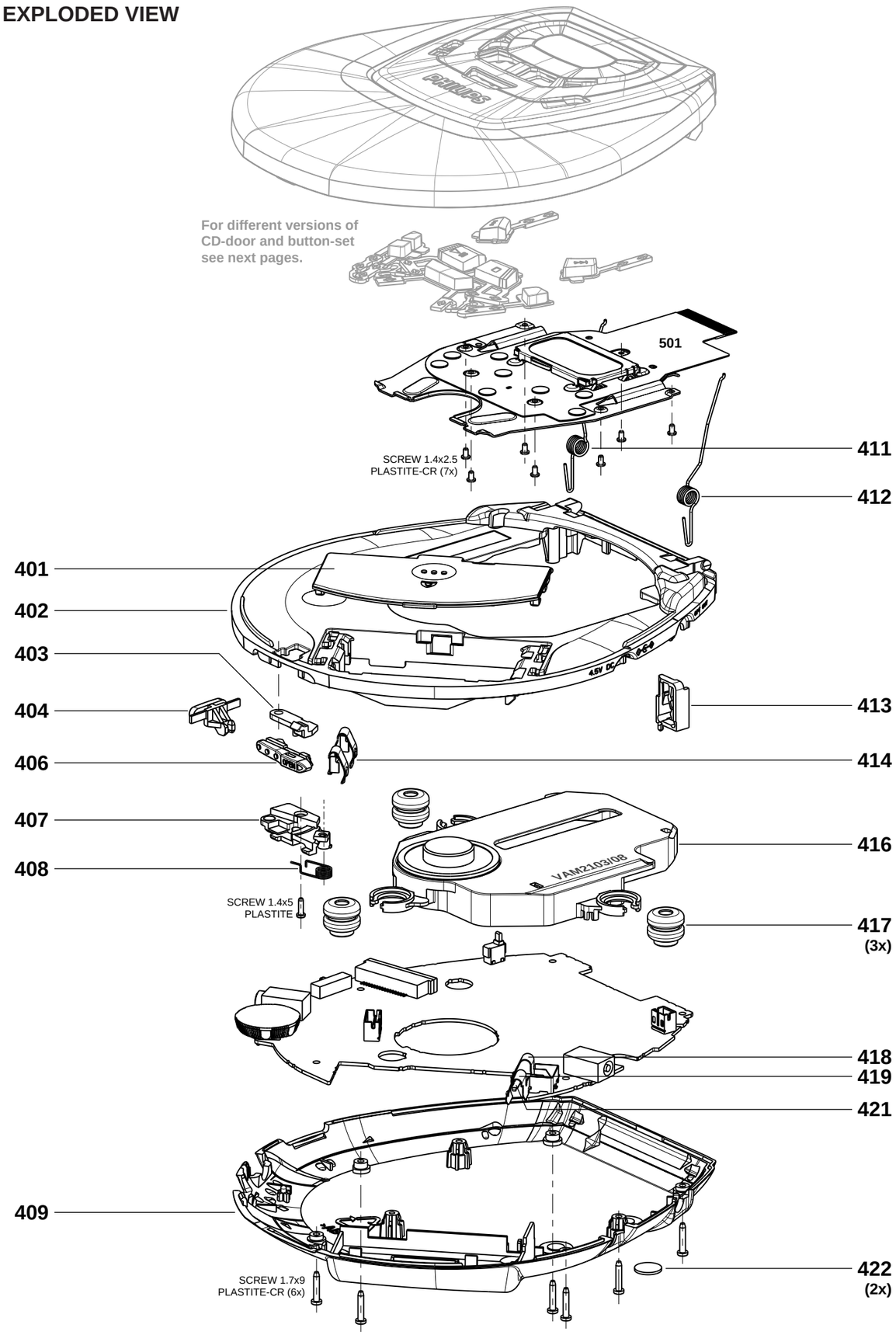

MECHANICAL PARTSLIST

401	3103 304 68080	DOOR-BATTERY-2 (not for translucent versions)
401	3103 307 97920	DOOR-BATTERY-2-LAC (only for translucent versions)
402	3103 307 99250	CABINET2-ASSEMBLY (not for translucent versions)
402	3103 307 99280	CABINET2-ASSEMBLY-LAC (only for translucent versions)
403	3103 304 68060	LEVER-OPEN-2
404	3103 304 68110	SLIDER-RESUME-2
406	3103 307 97940	SLIDER-OPEN-2-LAC
407	3103 304 68070	HOLDER-OPEN-2
408	3103 301 06500	SPRING-SLIDER-OPEN-2
409	3103 307 99270	BOTTOM-ASSEMBLY (only for USA version)
409	3103 307 99260	BOTTOM-PRI-ASSEMBLY (not for USA version)
411	3103 301 06520	SPRING-OPEN-LONG-L-2C45
412	3103 301 06510	SPRING-OPEN-LONG-R-2C45
413	3103 304 68090	BRAKE-2
414	3103 301 45180	SPRING-BATTERY-SHORT-2
416	9305 022 13208	CD-DRIVE VAM2103/08
417	4822 402 10897	DAMPER-CD DRIVE
418	3103 301 45200	SPRING-BATTERY-MINUS-2
419	3103 301 45190	SPRING-BATTERY-PLUS-2
421	3103 301 45210	SPRING-BATTERY-CHARGE-2
422	4822 462 41819	RUBBER FOOT
	4822 502 13872	SCREW 1.4x5 PLASTITE
	3103 300 41570	SCREW 1.4x2.5 PLASTITE-CR
	3103 300 41580	SCREW 1.7x9 PLASTITE-CR

CD-DOOR “COMPONENT RANGE”
NON ESP

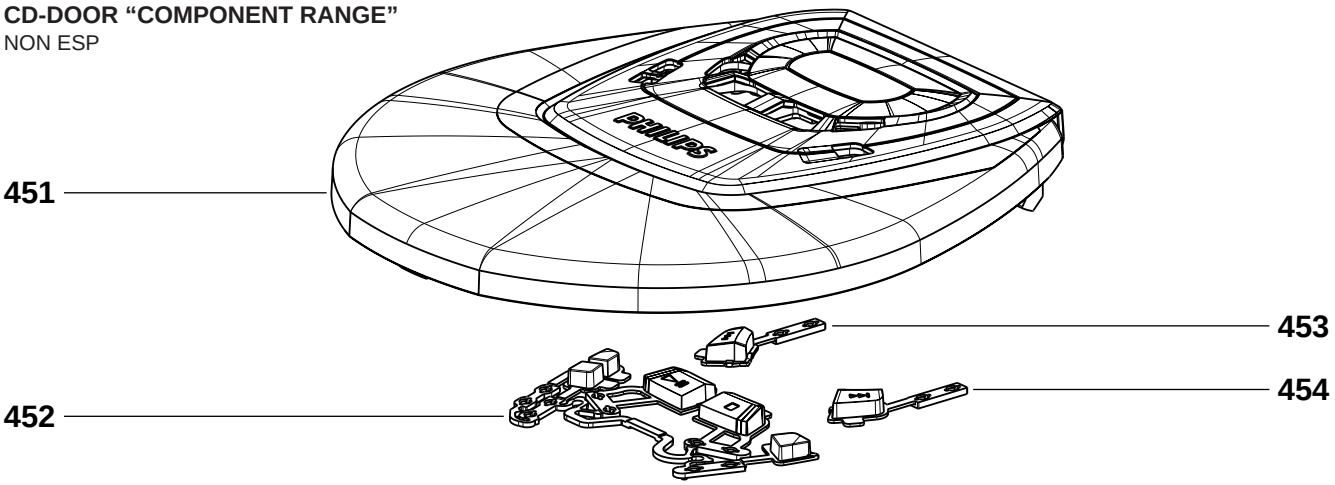

451	3103 307 99200	DOOR-CD-ASSEMBLY-1C (SILVER)
452	3103 307 97960	BUTTON-SET-PLAY-1C-LAC
453	3103 307 97970	BUTTON-PREV-1C-LAC
454	3103 307 97980	BUTTON-NEXT-1C-LAC

CD-DOOR “COMPONENT RANGE”
ESP, SQUARE ESP-BUTTON

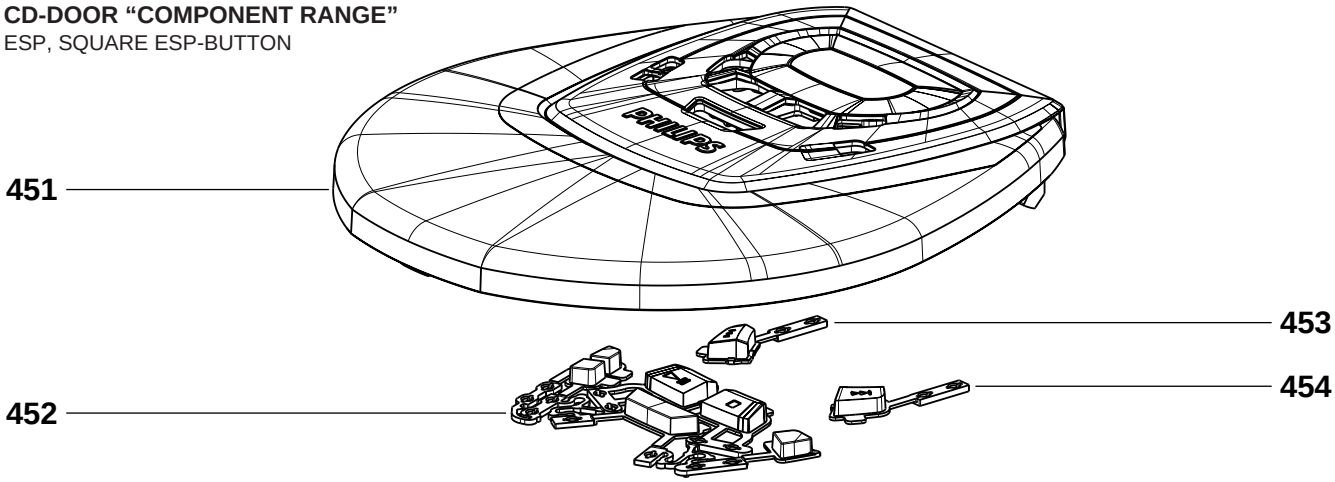

451	3103 307 99220	DOOR-CD-ASSEMBLY-2C40B (TRANSLUCENT BLUE, 40s ESP)
451	3103 307 99230	DOOR-CD-ASSEMBLY-2C40G (TRANSLUCENT GREEN, 40s ESP)
451	12NC follows	DOOR-CD-ASSEMBLY-2C40B (TRANSLUCENT RED, 40s ESP)
451	3103 307 99240	DOOR-CD-ASSEMBLY-2C45 (SILVER, 45s ESP)
451	3140 117 59760	DOOR-CD-ASSEMBLY-2C45G (TRANSLUCENT GREEN, 45s ESP)
452	3103 307 98320	BUTTON-SET-PLAY-2C40SQ-LAC-PRI
453	3103 307 97970	BUTTON-PREV-1C-LAC
454	3103 307 97980	BUTTON-NEXT-1C-LAC

CD-DOOR “COMPONENT RANGE”
ESP, ROUND ESP-BUTTON

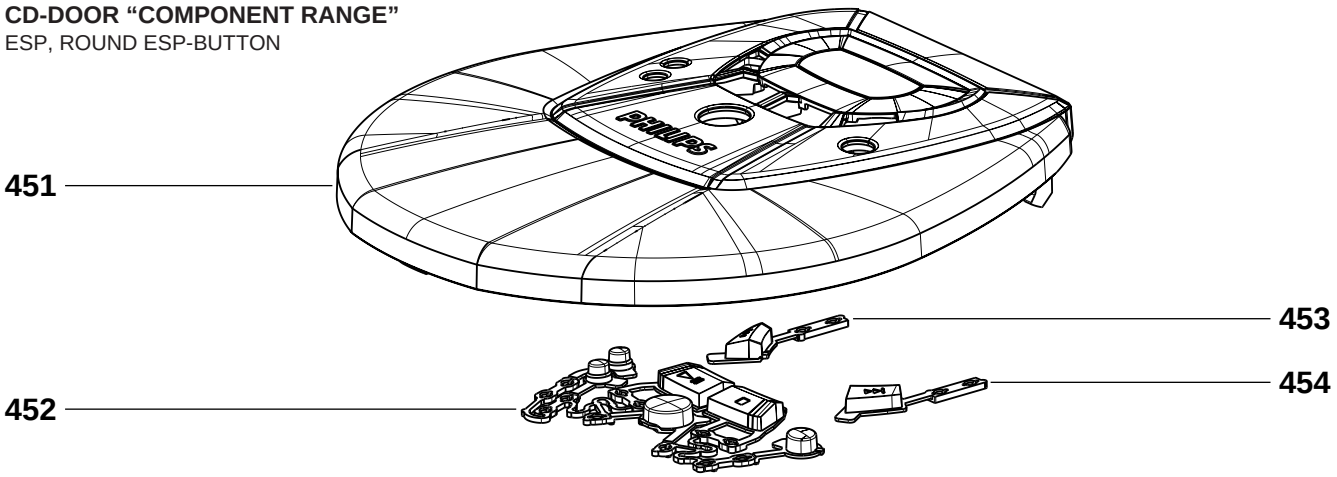

451	3103 307 99210	DOOR-CD-ASSEMBLY-2C12 (SILVER, 12s ESP)
451	3140 117 59750	DOOR-CD-ASSEMBLY-2C12B (TRANSLUCENT BLUE, 12s ESP)
452	3103 307 98210	BUTTON-SET-PLAY-2C12-LAC-PRI
453	3103 307 98010	BUTTON-PREV-2C40-LAC
454	3103 307 98020	BUTTON-NEXT-2C40-LAC

CD-DOOR “JEWEL RANGE”
ESP, SQUARE ESP-BUTTON

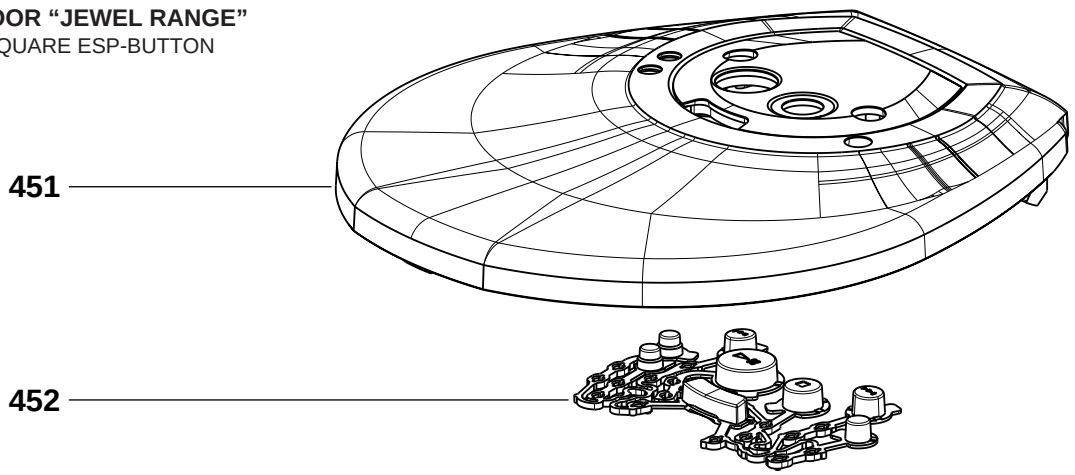

451	12NC follows	DOOR-CD-ASSEMBLY-2J40 (SILVER, 40s ESP)
451	12NC follows	DOOR-CD-ASSEMBLY-2J40B (BLUE, 40s ESP)
451	12NC follows	DOOR-CD-ASSEMBLY-2J40G (GREEN, 40s ESP)
451	12NC follows	DOOR-CD-ASSEMBLY-2J40P (PURPLE, 40s ESP)
451	12NC follows	DOOR-CD-ASSEMBLY-2J45 (SILVER, 45s ESP)
452	3103 307 98040	BUTTON-SET-ALL-2J45-LAC-PRI

ELECTRICAL PARTSLIST

MISCELLANEOUS

1250	2422 026 05086	EXT. DC JACK
1251	2422 086 10946	FUSE T630mA 65V ▲
1350	4822 265 11247	SOCKET, HEADPHONE HSJ1537
1350	4822 265 11565	SOCKET, HEADPHONE/RC HSJ1637
1401	2422 025 16706	CONNECTOR, FLEX-FOIL 22P
1418	4822 277 21643	SWITCH-SLIDE (HOLD/RESUME)
1430	4822 276 12889	SWITCH (CD-DOOR)
1800	4822 265 11576	CONNECTOR, FLEX-FOIL 18P

CAPACITORS

2251 ©	4822 126 14472	1µF	10%	10V
2252 ©	3198 017 41050	1µF	20%	10V
2253 ©	4822 126 14083	4,7µF	20%	10V
2254 ©	4822 122 33741	10pF	10%	50V
2255 ©	5322 126 11579	3,3nF	10%	63V
2256 ©	5322 126 11583	10nF	10%	63V
2257 ©	4822 126 14472	1µF	10%	10V
2258 ©	4822 122 31765	100pF	5%	50V
2259 ©	2238 786 56642	27nF	10%	16V
2260 ©	4822 126 14083	4,7µF	20%	10V
2261 ©	4822 124 12111	47µF	20%	4V
2262 ©	4822 124 12107	22µF	20%	4V
2263 ©	4822 126 14305	100nF	10%	16V
2264 ©	4822 122 31765	100pF	5%	50V
2266 ©	4822 126 14472	1µF	10%	10V
2267 ©	4822 126 14305	100nF	10%	16V
2268 ©	4822 122 31765	100pF	5%	50V
2269 ©	4822 126 13881	470pF	5%	50V
2271 ©	2238 780 15654	220nF	10%	16V
2272 ©	4822 126 14305	100nF	10%	16V
2274 ©	4822 126 14305	100nF	10%	16V
2275 ©	4822 126 14043	1µF	20%	16V
2277 ©	4822 126 14043	1µF	20%	16V
2299 ©	5322 126 11578	1nF	10%	63V
2300 ©	5322 126 11578	1nF	10%	63V
2301 ©	5322 126 11578	1nF	10%	63V
2304 ©	4822 122 31765	100pF	5%	50V
2305 ©	4822 122 31765	100pF	5%	50V
2306 ©	5322 126 11578	1nF	10%	63V
2307 ©	5322 126 11578	1nF	10%	63V
2308 ©	4822 126 14494	22nF	10%	25V
2309 ©	4822 126 14494	22nF	10%	25V
2310 ©	4822 126 14472	1µF	10%	10V
2312 ©	4822 124 12107	22µF	20%	4V
2313 ©	4822 124 12107	22µF	20%	4V
2350 ©	4822 126 14305	100nF	10%	16V
2351 ©	4822 126 14043	1µF	20%	16V
2352 ©	4822 126 14043	1µF	20%	16V
2353	4822 124 11947	10µF	20%	16V
2354	4822 124 11947	10µF	20%	16V
2355 ©	4822 126 12102	330nF	20%	50V
2356 ©	4822 126 14043	1µF	20%	16V
2357 ©	4822 124 12107	22µF	20%	4V
2358 ©	4822 126 13909	680pF	10%	50V
2359 ©	4822 126 13909	680pF	10%	50V
2360 ©	4822 126 14305	100nF	10%	16V
2361 ©	4822 126 14305	100nF	10%	16V
2362 ©	4822 126 14549	33nF	10%	16V
2363 ©	4822 126 14549	33nF	10%	16V
2364 ©	5322 126 11583	10nF	10%	63V
2365	4822 124 40998	22µF	20%	6,3V

CAPACITORS

2366	4822 124 11947	10µF	20%	16V
2367 ©	2238 780 15654	220nF	10%	16V
2368	4822 124 22652	2,2µF	20%	50V
2369 ©	4822 126 14305	100nF	10%	16V
2370 ©	4822 126 14305	100nF	10%	16V
2400 ©	4822 126 14305	100nF	10%	16V
2401 ©	4822 126 14305	100nF	10%	16V
2402 ©	4822 126 14305	100nF	10%	16V
2403 ©	4822 126 14083	4,7µF	20%	10V
2404 ©	4822 126 14043	1µF	20%	16V
2405 ©	5322 126 11578	1nF	10%	63V
2800 ©	4822 126 14247	1,5nF	10%	50V
2801 ©	4822 126 14249	560pF	10%	50V
2802 ©	4822 126 13883	220pF	5%	50V
2803 ©	4822 126 13883	220pF	5%	50V
2804 ©	4822 126 13883	220pF	5%	50V
2805 ©	4822 126 13883	220pF	5%	50V
2806 ©	4822 126 13883	220pF	5%	50V
2807 ©	4822 126 13883	220pF	5%	50V
2808 ©	4822 124 12107	22µF	20%	4V
2809 ©	5322 126 11578	1nF	10%	63V
2810 ©	4822 124 12107	22µF	20%	4V
2811	4822 124 40998	22µF	20%	6,3V
2812 ©	4822 126 14305	100nF	10%	16V
2813 ©	4822 126 14238	2,2nF	10%	50V
2814 ©	4822 122 33761	22pF	5%	50V
2815 ©	4822 126 14494	22nF	10%	25V
2816 ©	5322 126 11583	10nF	10%	63V
2817 ©	4822 126 14043	1µF	20%	16V
2818 ©	4822 126 14043	1µF	20%	16V
2819 ©	5322 126 11579	3,3nF	10%	63V
2820 ©	5322 126 11579	3,3nF	10%	63V
2821 ©	5322 126 11579	3,3nF	10%	63V
2822 ©	4822 126 14549	33nF	10%	16V
2823 ©	2238 780 15654	220nF	10%	16V
2824 ©	4822 126 13344	1,5nF	5%	63V
2825 ©	4822 126 13344	1,5nF	5%	63V
2826 ©	4822 126 14305	100nF	10%	16V
2827 ©	4822 124 12111	47µF	20%	4V
2850 ©	4822 126 14305	100nF	10%	16V
2852 ©	4822 126 14305	100nF	10%	16V
2853 ©	4822 122 31765	100pF	5%	50V
2854 ©	4822 122 33777	47pF	5%	63V
2870 ©	4822 126 14549	33nF	10%	16V
2871 ©	4822 124 12107	22µF	20%	4V
2872 ©	4822 126 14305	100nF	10%	16V
2890 ©	4822 122 31765	100pF	5%	50V
2891 ©	4822 126 14249	560pF	10%	50V
2950 ©	4822 126 13881	470pF	5%	50V
2951 ©	4822 126 13881	470pF	5%	50V
2952 ©	4822 126 13881	470pF	5%	50V
2953 ©	4822 126 14472	1µF	10%	10V
2954 ©	4822 126 14472	1µF	10%	10V
2955	4822 124 40998	22µF	20%	6,3V
2956 ©	4822 126 14247	1,5nF	10%	50V
2957 ©	4822 126 14247	1,5nF	10%	50V
2958 ©	4822 126 14305	100nF	10%	16V
2959 ©	4822 126 13881	470pF	5%	50V
2960 ©	4822 126 13881	470pF	5%	50V
2961 ©	4822 126 13881	470pF	5%	50V
2962 ©	4822 126 13881	470pF	5%	50V
2963 ©	5322 126 11583	10nF	10%	63V
2964 ©	4822 126 14305	100nF	10%	16V
2965 ©	5322 126 11579	3,3nF	10%	63V

CAPACITORS

2967 ©	4822 126 14305	100nF	10%	16V	
2968 ©	4822 126 14305	100nF	10%	16V	
2969 ©	4822 126 14305	100nF	10%	16V	
2970 ©	4822 126 14305	100nF	10%	16V	
2971 ©	4822 126 14305	100nF	10%	16V	
2972 ©	4822 126 13881	470pF	5%	50V	

RESISTORS

3230 ©	4822 117 12891	220kΩ	1%	0,0625W	
3231 ©	4822 117 13632	100kΩ	1%	0,0625W	
3232 ©	4822 051 30154	150kΩ	5%	0,0625W	
3233 ©	4822 117 12864	82kΩ	5%	0,6W	
3234 ©	4822 051 30105	1MΩ	5%	0,0625W	
3235 ©	3198 021 32250	2,2MΩ	5%	0,0625W	
3236 ©	4822 117 13632	100kΩ	1%	0,0625W	
3237 ©	4822 051 30105	1MΩ	5%	0,0625W	
3238 ©	4822 051 30105	1MΩ	5%	0,0625W	
3239 ©	4822 051 30105	1MΩ	5%	0,0625W	
3240 ©	4822 051 30474	470kΩ	5%	0,0625W	
3241 ©	4822 117 12925	47kΩ	1%	0,0625W	
3242 ©	4822 051 30474	470kΩ	5%	0,0625W	
3243 ©	4822 051 30474	470kΩ	5%	0,0625W	
3244 ©	4822 051 30103	10kΩ	5%	0,06W	
3245 ©	4822 116 30467	10kΩ	5%	NTC	
3246 ©	4822 051 30103	10kΩ	5%	0,06W	
3247 ©	4822 051 30684	680kΩ	5%	0,0625W	
3248 ©	4822 051 30154	150kΩ	5%	0,0625W	
3249 ©	3198 021 32250	2,2MΩ	5%	0,0625W	
3250 ©	4822 117 13632	100kΩ	1%	0,0625W	
3251 ©	4822 051 30103	10kΩ	5%	0,06W	
3252 ©	4822 117 13632	100kΩ	1%	0,0625W	
3253 ©	4822 117 13632	100kΩ	1%	0,0625W	
3254 ©	4822 051 30474	470kΩ	5%	0,0625W	
3255 ©	4822 051 30103	10kΩ	5%	0,06W	
3256 ©	4822 117 13632	100kΩ	1%	0,0625W	
3257 ©	4822 051 30222	2,2kΩ	5%	0,06W	
3258 ©	4822 051 30681	680Ω	5%	0,06W	
3259 ©	4822 051 30563	56kΩ	5%	0,0625W	
3260 ©	4822 051 30103	10kΩ	5%	0,06W	
3261 ©	4822 051 30103	10kΩ	5%	0,06W	
3262 ©	4822 117 12902	8,2kΩ	1%	0,0625W	
3263 ©	4822 051 30103	10kΩ	5%	0,06W	
3264 ©	3198 021 90030	CHIP JUMPER 0603			
3266 ©	4822 051 30103	10kΩ	5%	0,06W	
3268 ©	3198 021 32250	2,2MΩ	5%	0,0625W	
3276 ©	4822 051 30561	560Ω	5%	0,06W	
3277 ©	4822 051 30103	10kΩ	5%	0,06W	
3278 ©	4822 051 30103	10kΩ	5%	0,06W	
3279 ©	4822 117 12925	47kΩ	1%	0,0625W	
3280 ©	4822 051 30562	5,6kΩ	5%	0,0625W	
3281 ©	4822 051 30103	10kΩ	5%	0,06W	
3282 ©	4822 117 12917	1Ω	5%	0,0625W	
3283 ©	4822 117 12917	1Ω	5%	0,0625W	
3284 ©	4822 051 30472	4,7kΩ	5%	0,06W	
3285 ©	4822 051 30183	18kΩ	5%	0,06W	
3286 ©	4822 051 30334	330kΩ	5%	0,0625W	
3287 ©	4822 051 30103	10kΩ	5%	0,06W	
3288 ©	2120 108 93057	68kΩ	1%	0,0625W	
3289 ©	4822 117 13632	100kΩ	1%	0,0625W	
3290 ©	4822 051 30223	22kΩ	5%	0,06W	
3291 ©	4822 117 13632	100kΩ	1%	0,0625W	
3292 ©	4822 051 30334	330kΩ	5%	0,0625W	
3293 ©	2120 108 93057	68kΩ	1%	0,0625W	

RESISTORS

3294 ©	4822 117 12925	47kΩ	1%	0,0625W	
3295 ©	4822 117 12891	220kΩ	1%	0,0625W	
3296 ©	4822 117 13632	100kΩ	1%	0,0625W	
3297 ©	4822 117 13632	100kΩ	1%	0,0625W	
3298 ©	4822 051 30183	18kΩ	5%	0,06W	
3299 ©	4822 051 30103	10kΩ	5%	0,06W	
3300 ©	3103 308 52850	POTMETER ALPS 2x10kΩ CX2			
3301 ©	4822 051 30223	22kΩ	5%	0,06W	
3302 ©	4822 051 30223	22kΩ	5%	0,06W	
3303 ©	4822 051 30223	22kΩ	5%	0,06W	
3304 ©	4822 051 30332	3,3kΩ	5%	0,0625W	
3305 ©	4822 051 30332	3,3kΩ	5%	0,0625W	
3308 ©	4822 051 30681	680Ω	5%	0,06W	
3309 ©	4822 051 30681	680Ω	5%	0,06W	
3310 ©	4822 051 30152	1,5kΩ	5%	0,06W	
3311 ©	4822 051 30152	1,5kΩ	5%	0,06W	
3312 ©	4822 051 30103	10kΩ	5%	0,06W	
3313 ©	4822 051 30103	10kΩ	5%	0,06W	
3314 ©	4822 117 12925	47kΩ	1%	0,0625W	
3315 ©	4822 051 30223	22kΩ	5%	0,06W	
3316 ©	4822 051 30102	1kΩ	5%	0,06W	
3317 ©	4822 051 30272	2,7kΩ	5%	0,0625W	
3318 ©	4822 051 30272	2,7kΩ	5%	0,0625W	
3320 ©	4822 051 30103	10kΩ	5%	0,06W	
3321 ©	4822 051 30103	10kΩ	5%	0,06W	
3322 ©	4822 051 30392	3,9kΩ	5%	0,06W	only for ESP
3322 ©	4822 051 30332	3,3kΩ	5%	0,0625W	only for NON-ESP
3323 ©	4822 051 30392	3,9kΩ	5%	0,06W	only for ESP
3323 ©	4822 051 30332	3,3kΩ	5%	0,0625W	only for NON-ESP
3349 ©	4822 051 30333	33kΩ	5%	0,06W	
3350 ©	4822 051 30103	10kΩ	5%	0,06W	
3351 ©	4822 051 30472	4,7kΩ	5%	0,06W	
3352 ©	4822 051 30103	10kΩ	5%	0,06W	
3353 ©	4822 117 13613	2,2Ω	5%	0,0625W	
3354 ©	4822 117 13613	2,2Ω	5%	0,0625W	
3355 ©	3198 021 36880	6,8Ω	5%	0,0625W	not for /17
3355 ©	3198 021 90030	CHIP JUMPER 0603			only for /17
3356 ©	3198 021 36880	6,8Ω	5%	0,0625W	not for /17
3356 ©	3198 021 90030	CHIP JUMPER 0603			only for /17
3357 ©	3198 021 90030	CHIP JUMPER 0603			
3359 ©	4822 051 30103	10kΩ	5%	0,06W	
3360 ©	4822 051 30332	3,3kΩ	5%	0,0625W	only for ESP
3360 ©	3198 021 90030	CHIP JUMPER 0603			only for NON-ESP
3361 ©	4822 051 30223	22kΩ	5%	0,06W	
3362 ©	4822 117 13632	100kΩ	1%	0,0625W	
3363 ©	4822 117 12925	47kΩ	1%	0,0625W	
3364 ©	4822 117 12925	47kΩ	1%	0,0625W	
3365 ©	4822 051 30101	100Ω	5%	0,06W	
3366 ©	4822 051 30105	1MΩ	5%	0,0625W	
3367 ©	4822 051 30105	1MΩ	5%	0,0625W	
3400 ©	4822 117 12891	220kΩ	1%	0,0625W	
3401 ©	4822 117 12891	220kΩ	1%	0,0625W	
3402 ©	4822 051 30101	100Ω	5%	0,06W	
3403 ©	4822 051 30101	100Ω	5%	0,06W	
3404 ©	4822 051 30123	12kΩ	5%	0,0625W	
3405 ©	4822 051 30562	5,6kΩ	5%	0,0625W	
3406 ©	4822 117 12891	220kΩ	1%	0,0625W	
3407 ©	4822 051 30109	10Ω	5%	0,06W	
3408 ©	3198 021 32250	2,2MΩ	5%	0,0625W	
3409 ©	4822 117 12891	220kΩ	1%	0,0625W	
3411 ©	4822 051 30109	10Ω	5%	0,06W	
3415 ©	4822 051 30102	1kΩ	5%	0,06W	
3416 ©	4822 051 30102	1kΩ	5%	0,06W	
3417 ©	4822 051 30102	1kΩ	5%	0,06W	

RESISTORS

3800 ©	4822 051 30103	10kΩ	5%	0,06W	
3801 ©	4822 051 30103	10kΩ	5%	0,06W	
3802 ©	4822 051 30103	10kΩ	5%	0,06W	
3803 ©	4822 051 30103	10kΩ	5%	0,06W	
3804 ©	4822 051 30103	10kΩ	5%	0,06W	
3805 ©	4822 051 30103	10kΩ	5%	0,06W	
3807 ©	4822 051 30109	10Ω	5%	0,06W	
3808 ©	4822 051 30102	1kΩ	5%	0,06W	
3809 ©	4822 051 30339	33Ω	5%	0,0625W	
3810 ©	4822 051 30474	470kΩ	5%	0,0625W	
3811 ©	4822 051 30222	2,2kΩ	5%	0,06W	
3812 ©	4822 051 30223	22kΩ	5%	0,06W	
3813 ©	4822 051 30333	33kΩ	5%	0,06W	
3814 ©	4822 051 30562	5,6kΩ	5%	0,0625W	
3815 ©	4822 051 30109	10Ω	5%	0,06W	
3816 ©	4822 051 30222	2,2kΩ	5%	0,06W	
3817 ©	4822 051 30222	2,2kΩ	5%	0,06W	
3818 ©	4822 051 30222	2,2kΩ	5%	0,06W	
3819 ©	4822 051 30222	2,2kΩ	5%	0,06W	
3820 ©	4822 051 30222	2,2kΩ	5%	0,06W	
3821 ©	4822 051 30222	2,2kΩ	5%	0,06W	
3822 ©	3198 021 90030	CHIP JUMPER 0603			only for NON-ESP
3823 ©	4822 051 30103	10kΩ	5%	0,06W	
3824 ©	4822 051 30103	10kΩ	5%	0,06W	
3825 ©	4822 051 30103	10kΩ	5%	0,06W	
3826 ©	4822 051 30103	10kΩ	5%	0,06W	
3827 ©	4822 051 30103	10kΩ	5%	0,06W	
3829 ©	3198 021 90030	CHIP JUMPER 0603			
3830 ©	3198 021 90030	CHIP JUMPER 0603			
3831 ©	3198 021 90030	CHIP JUMPER 0603			
3832 ©	4822 051 30332	3,3kΩ	5%	0,0625W	only for ESP
3833 ©	3198 021 90030	CHIP JUMPER 0603			only for ESP
3834 ©	4822 117 12139	22Ω	5%	0,0625W	
3835 ©	4822 117 13608	4,7Ω	5%	0,0625W	
3836 ©	4822 051 30102	1kΩ	5%	0,06W	
3837 ©	4822 051 30102	1kΩ	5%	0,06W	
3838 ©	3198 021 90030	CHIP JUMPER 0603			
3850 ©	4822 117 12139	22Ω	5%	0,0625W	
3851 ©	3198 021 90030	CHIP JUMPER 0603			
3852 ©	3198 021 90030	CHIP JUMPER 0603			
3853 ©	3198 021 90030	CHIP JUMPER 0603			
3854 ©	3198 021 90030	CHIP JUMPER 0603			
3855 ©	4822 117 12139	22Ω	5%	0,0625W	
3856 ©	4822 051 30102	1kΩ	5%	0,06W	
3870 ©	3198 021 90030	CHIP JUMPER 0603			
3871 ©	3198 021 90030	CHIP JUMPER 0603			
3872 ©	3198 021 90030	CHIP JUMPER 0603			
3873 ©	3198 021 90030	CHIP JUMPER 0603			
3874 ©	3198 021 90030	CHIP JUMPER 0603			
3875 ©	3198 021 90030	CHIP JUMPER 0603			
3876 ©	3198 021 90030	CHIP JUMPER 0603			
3877 ©	3198 021 90030	CHIP JUMPER 0603			
3878 ©	3198 021 90030	CHIP JUMPER 0603			
3879 ©	3198 021 90030	CHIP JUMPER 0603			
3880 ©	4822 117 12139	22Ω	5%	0,0625W	
3881 ©	4822 051 30103	10kΩ	5%	0,06W	
3882 ©	4822 051 30103	10kΩ	5%	0,06W	
3890 ©	4822 051 30222	2,2kΩ	5%	0,06W	
3891 ©	4822 117 11817	1,2kΩ	1%	0,0625W	
3892 ©	4822 051 30221	220Ω	5%	0,06W	
3893 ©	4822 051 30223	22kΩ	5%	0,06W	
3894 ©	4822 051 30223	22kΩ	5%	0,06W	
3895 ©	4822 051 30103	10kΩ	5%	0,06W	
3951 ©	3198 021 90030	CHIP JUMPER 0603			

RESISTORS

3952 ©	4822 051 30682	6,8kΩ	5%	0,0625W	
3953 ©	4822 051 30682	6,8kΩ	5%	0,0625W	
3954 ©	4822 117 12925	47kΩ	1%	0,0625W	
3955 ©	4822 117 12925	47kΩ	1%	0,0625W	
3957 ©	4822 051 30392	3,9kΩ	5%	0,06W	
3958 ©	4822 051 30103	10kΩ	5%	0,06W	
3959 ©	4822 051 30562	5,6kΩ	5%	0,0625W	only for ESP
3959 ©	4822 051 30273	27kΩ	5%	0,0625W	only for NON-ESP
3961 ©	4822 051 30392	3,9kΩ	5%	0,06W	
3963 ©	3198 021 31840	180kΩ	5%	0,0625W	

COILS

5250	4822 157 51462	10µH 10% ▲
5251 ©	4822 157 70299	2,2µH
5400 ©	4822 242 10845	CER. RES. 4,23MHz
5800 ©	4822 157 11781	FILTER, 100MHz
5801 ©	4822 242 81546	CER. RES. 8,4672MHz
5802 ©	4822 157 11781	FILTER, 100MHz
5806 ©	4822 157 11781	FILTER, 100MHz
5834 ©	4822 157 11781	FILTER, 100MHz

DIODES

6250 ©	9322 128 70685	SS14
6251 ©	4822 130 83757	BAS216
6252 ©	4822 130 83757	BAS216
6253 ©	4822 130 83757	BAS216
6254 ©	4822 130 83757	BAS216
6255 ©	4822 130 70064	LM285D
6256 ©	4822 130 82262	BAT54S
6258 ©	9322 128 70685	SS14
6261 ©	4822 130 83757	BAS216
6262 ©	4822 130 10654	BAT254
6265 ©	4822 130 10654	BAT254
6350 ©	4822 130 10794	BZX284-C10
6351 ©	4822 130 82262	BAT54S
6352 ©	4822 130 82262	BAT54S

TRANSISTORS

7251 ©	9340 218 50115	BC857BW
7252 ©	4822 130 11549	BSH105 ▲
7253 ©	5322 130 60123	BC807-40
7260 ©	9340 217 70115	BC847BW
7263 ©	9340 217 70115	BC847BW
7264	5322 130 61569	BC868
7265 ©	9340 217 70115	BC847BW
7266 ©	9340 217 70115	BC847BW
7267 ©	9340 218 50115	BC857BW
7301 ©	9340 217 70115	BC847BW
7302 ©	9340 217 70115	BC847BW
7351 ©	9340 217 70115	BC847BW
7352 ©	4822 130 42615	BC817-40
7353 ©	9340 217 70115	BC847BW
7355 ©	9340 218 50115	BC857BW
7800 ©	9340 218 50115	BC857BW
7890 ©	9340 218 50115	BC857BW
7891 ©	9340 218 50115	BC857BW
7892 ©	9340 217 70115	BC847BW
7955 ©	5322 130 63681	BC857CW
7956 ©	5322 130 63679	BC847CW
7957 ©	9340 217 70115	BC847BW
7959 ©	5322 130 63681	BC857CW
7961 ©	9340 217 70115	BC847BW
7962 ©	9340 217 70115	BC847BW

INTEGRATED CIRCUITS

7250©	4822 209 17289	74LV14PW
7262©	9322 142 72685	TC75W51FU
7300©	9322 142 72685	TC75W51FU
7350©	9322 142 97668	TA2120FN HEADPHONE AMPLIFIER
7400©	3103 308 84100	TMP86CH29LF-AZ9000.2
7801©	9352 641 80557	SAA7324H/M2B CD10/M2B
7850©	9322 142 87671	SM5903BF NPC
7870©	4822 209 16518	HYB314400BJ-60 4Mbit DRAM
7870©	9322 138 26668	MSM51V17405D-60TS-K 16Mbit DRAM
7950©	4822 209 16085	MPC17A50VM SERVO DRIVER
7951©	9322 142 72685	TC75W51FU
7958©	9322 142 72685	TC75W51FU